Steel Design Guide Series

2

# Steel and Composite Beams with Web Openings

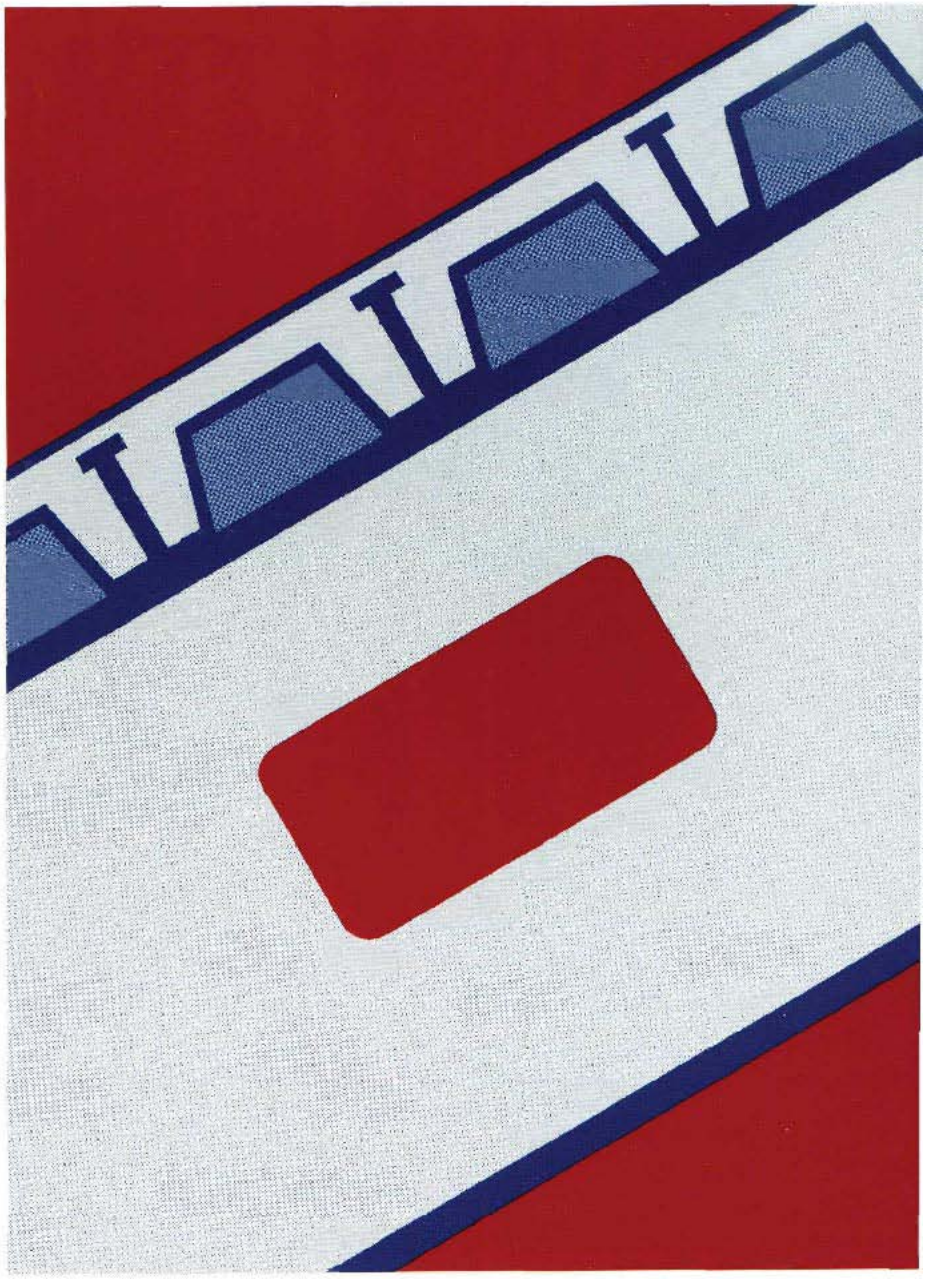

Steel Design Guide Series

2

# Steel and Composite Beams with Web Openings

## Design of Steel and Composite Beams with Web Openings

David Darwin
Professor of Civil Engineering
University of Kansas
Lawrence, Kansas

AMERICAN INSTITUTE OF STEEL CONSTRUCTION

The information presented in this publication has been prepared in accordance with recognized engineering principles and is for general information only. While it is believed to be accurate, this information should not be used or relied upon for any specific application without competent professional examination and verification of its accuracy, suitablility, and applicability by a licensed professional engineer, designer, or architect. The publication of the material contained herein is not intended as a representation or warranty on the part of the American Institute of Steel Construction or of any other person named herein, that this information is suitable for any general or particular use or of freedom from infringement of any patent or patents. Anyone making use of this information assumes all liability arising from such use.

Caution must be exercised when relying upon other specifications and codes developed by other bodies and incorporated by reference herein since such material may be modified or amended from time to time subsequent to the printing of this edition. The Institute bears no responsibility for such material other than to refer to it and incorporate it by reference at the time of the initial publication of this edition.

Printed in the United States of America

Second Printing: September 1991

Third Printing: October 2003

# TABLE OF CONTENTS

# PREFACE

This booklet was prepared under the direction of the Committee on Research of the American Institute of Steel Construction, Inc. as part of a series of publications on special topics related to fabricated structural steel. Its purpose is to serve as a supplemental reference to the AISC Manual of Steel Construction to assist practicing engineers engaged in building design.

The design guidelines suggested by the author that are outside the scope of the AISC Specifications or Code do not represent an official position of the Institute and are not intended to exclude other design methods and procedures. It is recognized that the design of structures is within the scope of expertise of a competent licensed structural engineer, architect or other licensed professional for the application of principles to a particular structure.

The sponsorship of this publication by the American Iron and Steel Institute is gratefully acknowledged.

# Chapter 1
# INTRODUCTION

Height limitations are often imposed on multistory buildings based on zoning regulations, economic requirements and esthetic considerations, including the need to match the floor heights of existing buildings. The ability to meet these restrictions is an important consideration in the selection of a framing system and is especially important when the framing system is structural steel. Web openings can be used to pass utilities through beams and, thus, help minimize story height. A decrease in building height reduces both the exterior surface and the interior volume of a building, which lowers operational and maintenance costs, as well as construction costs. On the negative side, web openings can significantly reduce the shear and bending capacity of steel or composite beams.

Web openings have been used for many years in structural steel beams, predating the development of straightforward design procedures, because of necessity and/or economic advantage. Openings were often reinforced, and composite beams were often treated as noncomposite members at web openings. Reinforcement schemes included the use of both horizontal and vertical bars, or bars completely around the periphery of the opening. As design procedures were developed, unreinforced and reinforced openings were often approached as distinct problems, as were composite and noncomposite members.

In recent years, a great deal of progress has been made in the design of both steel and composite beams with web openings. Much of the work is summarized in state-of-the-art reports (Darwin 1985, 1988 & Redwood 1983). Among the benefits of this progress has been the realization that the behavior of steel and composite beams is quite similar at web openings. It has also become clear that a single design approach can be used for both unreinforced and reinforced openings. If reinforcement is needed, horizontal bars above and below the opening are fully effective. Vertical bars or bars around the opening periphery are neither needed nor cost effective.

This guide presents a unified approach to the design of structural steel members with web openings. The approach is based on strength criteria rather than allowable stresses, because at working loads, locally high stresses around web openings have little connection with a member's deflection or strength.

The procedures presented in the following chapters are formulated to provide safe, economical designs in terms of both the completed structure and the designer's time. The design expressions are applicable to members with individual openings or multiple openings spaced far enough apart so that the openings do not interact. Castellated beams are not included. For practical reasons, opening depth is limited to 70 percent of member depth. Steel yield strength is limited to 65 ksi and sections must meet the AISC requirements for compact sections (AISC 1986).

# Chapter 2
# DEFINITIONS AND NOTATION

## 2.1 DEFINITIONS

The following terms apply to members with web openings.

**bottom tee**—region of a beam below an opening.

bridging—separation of the concrete slab from the steel section in composite beams. The separation occurs over an opening between the low moment end of the opening and a point outside the opening past the high moment end of the opening.

**high moment end—**the edge of an opening subjected to the greater primary bending moment. The secondary and primary bending moments act in the same direction.

**low moment end—**the edge of an opening subjected to the lower primary bending moment. The secondary and primary bending moments act in opposite directions.

**opening parameter**—quantity used to limit opening size and aspect ratio.

**plastic neutral axis**—position in steel section, or top or bottom tees, at which the stress changes abruptly from tension to compression.

**primary bending moment**—bending moment at any point in a beam caused by external loading.

reinforcement—longitudinal steel bars welded above and below an opening to increase section capacity.

**reinforcement, slab**—reinforcing steel within a concrete slab.

**secondary bending moment**—bending moment within a tee that is induced by the shear carried by the tee.

**tee**—region of a beam above or below an opening.

**top tee**—region of a beam above an opening.

**unperforated member—**section without an opening. Refers to properties of the member at the position of the opening.

## 2.2 NOTATION

| | |
|---|---|
| $A$ | Gross transformed area of a tee |
| $A_f$ | Area of flange |
| $A_r$ | Cross-sectional area of reinforcement along top or bottom edge of opening |
| $A_s$ | Cross-sectional area of steel in unperforated member |
| $A_{sc}$ | Cross-sectional area of shear stud |
| $A_{sn}$ | Net area of steel section with opening and reinforcement |
| $A_{st}$ | Net steel area of top tee |
| $A^T$ | Area of a steel tee |
| $A_{vc}$ | Effective concrete shear area = $3t_s t_e$ |
| $A_y$ | Effective shear area of a steel tee |
| $D_o$ | Diameter of circular opening |
| $E$ | Modulus of elasticity of steel |
| $E_c$ | Modulus of elasticity of concrete |
| $F_{x_1}$, $F_{x_2}$ | Horizontal forces at ends of a beam element |
| $F_y$ | Yield strength of steel |
| $\bar{F}_y$ | Reduced axial yield strength of steel; see Eqs. 5-19 and 5-20 |
| $F_{y_1}$, $F_{y_2}$ | Vertical forces at ends of a beam element |
| $F_{yr}$ | Yield strength of opening reinforcement |
| $G$ | Shear modulus = $E/2(1 + \nu)$ |
| $I$ | Moment of inertia of a steel tee, with subscript $b$ or $t$ |
| $I_b$ | Moment of inertia of bottom steel tee |
| $I_e$ | Moment of inertia of unperforated steel beam or effective moment of inertia of unperforated composite beam |
| $I_o$ | Moment of inertia of perforated beam |
| $I_T$ | Moment of inertia of tee |
| $I_t$ | Moment inertia of top steel tee |
| $J$ | Torsional constant |
| $K$ | Shape factor for shear |
| $K_{i,j}$ | Elements of beam stiffness matrix, $i, j$ = 1, 6 |
| $[K]$ | Stiffness matrix of a beam element |
| $L$ | Length of a beam |
| $L_b$ | Unbraced length of compression flange |
| $M$ | Bending moment at center line of opening |
| $M_{bh}$, $M_{bl}$ | Secondary bending moment at high and low moment ends of bottom tee, respectively. |
| $M_m$ | Maximum nominal bending capacity at the location of an opening |
| $M_n$ | Nominal bending capacity |
| $M_p$ | Plastic bending capacity of an unperforated steel beam |
| $M_{pc}$ | Plastic bending capacity of an unperforated composite beam |
| $M_{th}$, $M_{tl}$ | Secondary bending moment at high and low moment ends of top tee, respectively |
| $M_u$ | Factored bending moment |
| $M_1$, $M_2$ | Moments at ends of a beam element |
| $N$ | Number of shear connectors between the high moment end of an opening and the support |
| $N_o$ | Number of shear connectors over an opening |
| $P$ | Axial force in top or bottom tee |
| $\{P\}$ | Force vector for a beam element |
| $P_b$ | Axial force in bottom tee |
| $P_c$ | Axial force in concrete for a section under pure bending |

| | |
|---|---|
| $P_{c\,min}$ | Minimum value of $P_c$ for which Eq. 3-10 is accurate $= F_y(\frac{3}{4}t_w d - \Delta A_s)$ |
| $P_{ch}$, $P_{cl}$ | Axial force in concrete at high and low moment ends of opening, respectively, for a section at maximum shear capacity |
| PNA | Plastic neutral axis |
| $P_r$ | Axial force in opening reinforcement |
| $P_t$ | Axial force in top tee |
| $Q_n$ | Individual shear connector capacity, including reduction factor for ribbed slabs |
| $R$ | Ratio of factored load to design capacity at an opening $= V_u/\phi V_n$ $= M_u/\phi M_n$ |
| $R_s$ | Strength reduction factor for shear studs in ribbed slabs |
| $R_{wr}$ | Required strength of a weld |
| $S$ | Clear space between openings |
| $T'$ | Tensile force in net steel section |
| $\{U\}$ | Displacement vector for a beam element |
| $V$ | Shear at opening |
| $V_b$ | Shear in bottom tee |
| $\bar{V}_c$ | Calculated shear carried by concrete slab $= V_{pt}(\mu/\nu - 1) \geq 0$, or $V_{mt}(sh) - V_{pt}$, whichever is less |
| $V_m$ | Maximum nominal shear capacity at the location of an opening |
| $V_{mb}$, $V_{mt}$ | Maximum nominal shear capacity of bottom and top tees, respectively |
| $V_{mt}(sh)$ | Pure shear capacity of top tee |
| $V_n$ | Nominal shear capacity |
| $V_p$ | Plastic shear capacity of top or bottom tee |
| $\bar{V}_p$ | Plastic shear capacity of unperforated beam |
| $V_{pb}$, $V_{pt}$ | Plastic shear capacity of bottom and top tees, respectively |
| $V_t$ | Shear in top tee |
| $V_u$ | Factored shear |
| $Z$ | Plastic section modulus |
| $a_o$ | Length of opening |
| $\bar{a}$ | Depth of concrete compressive block |
| $b$ | Projecting width of flange or reinforcement |
| $b_e$ | Effective width of concrete slab |
| $b_{e:n}$ | Sum of minimum rib widths for ribs that lie within $b_e$; for composite beams with longitudinal ribs in slab |
| $b_f$ | Width of flange |
| $d$ | Depth of steel section |
| $d_h$, $d_l$ | Distance from top of steel section to centroid of concrete force at high and low moment ends of opening, respectively. |
| $d_r$ | Distance from outside edge of flange to centroid of opening reinforcement; may have different values in top and bottom tees |
| $e$ | Eccentricity of opening; always positive for steel sections; positive up for composite sections |
| $f'_c$ | Compressive (cylinder) strength of concrete |
| $h_o$ | Depth of opening |
| $\ell$, $\ell_b$, $\ell_t$ | Distance from center of gravity of unperforated beam to center of gravity of a tee section, bottom tee, and top tee, respectively. |
| $\ell_1$ | Length of extension of reinforcement beyond edge of opening |
| $l_o$ | Distance from high moment end of opening to adjacent support |
| $l_1$ | Distance from low moment end of opening to adjacent support |
| $l_2$ | Distance from support to point at which deflection is calculated |
| $l_3$ | Distance from high moment end of opening to point at which deflection is calculated |
| $p_o$ | Opening parameter $= \dfrac{a_o}{h_o} + \dfrac{6h_o}{d}$ |
| $r_\Delta$ | Ratio of midspan deflection of a beam with an opening to midspan deflection of a beam without an opening |
| $s$, $s_b$, $s_t$ | Depth of a tee, bottom tee and top tee, respectively |
| $\bar{s}$, $\bar{s}_b$, $\bar{s}_t$ | Effective depth of a tee, bottom tee and top tee, respectively, to account for movement of PNA when an opening is reinforced; used *only for calculation of* $\nu$, when $\nu \geq \mu$ |
| $t$ | Thickness of flange or reinforcement |
| $t_e$ | Effective thickness of concrete slab |
| $t_f$ | Thickness of flange |
| $t_s$ | Total thickness of concrete slab |
| $t'_s$ | Thickness of concrete slab above the rib |
| $t_w$ | Thickness of web |
| $u_1$, $u_2$ | Horizontal displacements at ends of a beam element |
| $v_1$, $v_2$ | Vertical displacements at ends of a beam element |
| $w$ | Uniform load |
| $w_u$ | Factored uniform load |
| $x$ | Distance from top of flange to plastic neutral axis in flange or web of a composite beam |
| $z$ | Distance between points about which secondary bending moments are calculated |
| $\alpha_t$, $\beta_t$, $\gamma_t$ | Variables used to calculate $V_{mt}$ |
| $\alpha_v$ | Ratio of maximum nominal shear capacity to plastic shear capacity of a tee, $\alpha_{vb} = V_{mb}/V_{pb}$ and $\alpha_{vt} = V_{mt}/V_{pt}$ |
| $\beta$ | Term in stiffness matrix for equivalent beam element at web opening; see Eq. 6-12 |
| $\Delta A_s$ | Net reduction in area of steel section due to presence of an opening and reinforcement $= h_o t_w - 2A_r$ |

| | |
|---|---|
| $\Delta_b$ | Maximum deflection due to bending of a beam without an opening |
| $\Delta_m$ | Maximum deflection of a beam with an opening due to bending and shear |
| $\Delta_o$ | Deflection through an opening |
| $\Delta_{ob}$ | Bending deflection through an opening |
| $\Delta_{os}$ | Shear deflection through an opening |
| $\Delta_{p_1}$, $\Delta_{p_2}$ | Components of deflection caused by presence of an opening at a point between high moment end of opening and support |
| $\Delta_s$ | Maximum deflection due to shear of a beam without an opening |
| $\Theta_1$, $\Theta_2$ | Rotations of a beam at supports due to presence of an opening $= EI/(A_y G)$; see Eq. 6-12 |
| $\theta_H$, $\theta_T$ | Rotations used to calculate beam deflections due to presence of an opening; see Eq. 6-3 |
| $\theta_1$, $\theta_2$ | Rotations at ends of a beam element |
| $\lambda$ | Constant used in linear approximation of von Mises yield criterion; recommended value $= \sqrt{2}$ |
| $\mu$ | Dimensionless ratio relating the secondary bending moment contributions of concrete and opening reinforcement to the product of the plastic shear capacity of a tee and the depth of the tee $= \dfrac{2P_r d_r + P_{ch} d_h - P_{cl} d_l}{V_p s}$ |
| $\nu$, $\nu_b$, $\nu_t$ | Ratio of length to depth or length to effective depth for a tee, bottom tee or top tee, respectively $= a_o/s$ or $a_o/\bar{s}$ |
| $\nu$ | Poisson's ratio |
| $\tau$ | Average shear stress |
| $\phi$ | Resistance factor |

*Subscripts:*

| | |
|---|---|
| $b$ | Bottom tee |
| $m$ | Maximum or mean |
| $n$ | Nominal |
| $t$ | Top tee |
| $u$ | Factored |

# Chapter 3
# DESIGN OF MEMBERS WITH WEB OPENINGS

## 3.1 GENERAL

This chapter presents procedures to determine the strength of steel and composite beams with web openings. Composite members may have solid or ribbed slabs, and ribs may be parallel or perpendicular to the steel section. Openings may be reinforced or unreinforced. Fig. 3.1 illustrates the range of beam and opening configurations that can be handled using these procedures. The procedures are compatible with the LRFD procedures of the American Institute of Steel Construction, as presented in the *Load and Resistance Factor Design Manual of Steel Construction* (AISC 1986a). With minor modifications, the procedures may also be used with Allowable Stress Design techniques (see section 3.8).

Design equations and design aids (Appendix A) based on these equations accurately represent member strength with a minimum of calculation. The derivation of these equations is explained in Chapter 5.

The design procedures presented in this chapter are limited to members with a yield strength $F_y \leq 65$ ksi meeting the AISC criteria for compact sections (AISC 1986b). Other limitations on section properties and guidelines for detailing are presented in section 3.7. Design examples are presented in Chapter 4.

## 3.2 LOAD AND RESISTANCE FACTORS

The load factors for structural steel members with web openings correspond to those used in the AISC Load and Resistance Factor Design Specifications for Structural Steel Buildings (AISC 1986b).

Resistance factors, $\phi = 0.90$ for steel members and 0.85 for composite members, should be applied to both moment and shear capacities at openings.

Members should be proportioned so that the factored loads are less than the design strengths in both bending and shear.

$$M_u \leq \phi M_n \tag{3-1}$$

$$V_u \leq \phi V_n \tag{3-2}$$

in which

$M_u$ = factored bending moment
$V_u$ = factored shear
$M_n$ = nominal flexural strength
$V_n$ = nominal shear strength

## 3.3 OVERVIEW OF DESIGN PROCEDURES

Many aspects of the design of steel and composite members with web openings are similar. At web openings, members may be subjected to both bending and shear. Under the combined loading, member strength is below the strength that can be obtained under either bending or shear alone. Design of web openings consists of first determining the maximum nominal bending and shear capacities at an opening, $M_m$ and $V_m$, and then obtaining the nominal capacities, $M_n$ and $V_n$, for the combinations of bending moment and shear that occur at the opening.

For steel members, the maximum nominal bending strength, $M_m$, is expressed in terms of the strength of the member without an opening. For composite sections, expressions for $M_m$ are based on the location of the plastic neutral axis in the unperforated member. The maximum nomi-

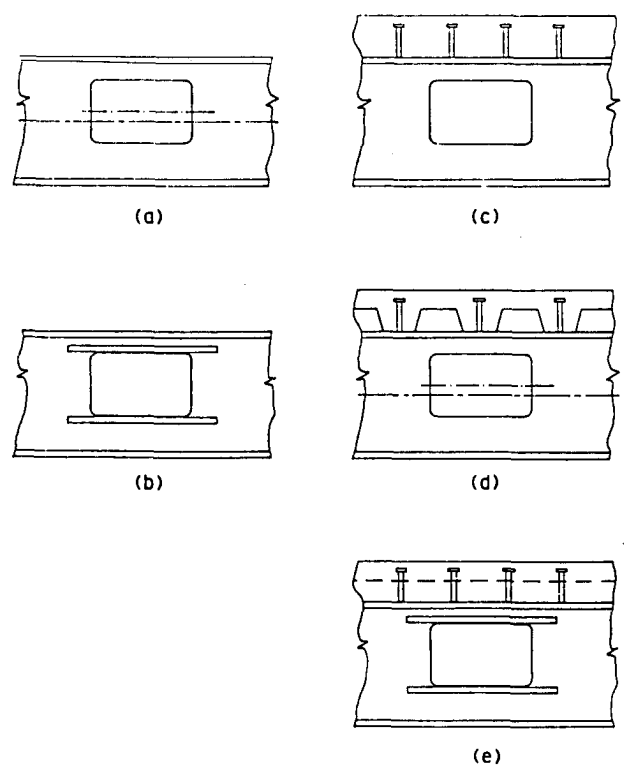


*Fig.3.1. Beam and opening configurations, (a) Steel beam with unreinforced opening, (b) steel beam with reinforced opening, (c) composite beam, solid slab, (d) composite beam, ribbed slab with transverse ribs, (e) composite beam with reinforced opening, ribbed slab with logitudinal ribs.*

nal shear capacity, $V_m$, is expressed as the sum of the shear capacities, $V_{mt}$ and $V_{mb}$, for the regions above and below the opening (the top and bottom tees).

The design expressions for composite beams apply to openings located in positive moment regions. The expressions for steel beams should be used for openings placed in negative moment regions of composite members.

The next three sections present the moment-shear interaction curve and expressions for $M_m$ and $V_m$ used to design members with web openings. Guidelines for member proportions follow the presentation of the design equations.

## 3.4 MOMENT-SHEAR INTERACTION

Simultaneous bending and shear occur at most locations within beams. At a web opening, the two forces interact to produce lower strengths than are obtained under pure bending or pure shear alone. Fortunately at web openings, the interaction between bending and shear is weak, that is, neither the bending strength nor the shear strength drop off rapidly when openings are subjected to combined bending and shear.

The interaction between the design bending and shear strengths, $\phi M_n$ and $\phi V_n$, is shown as the solid curve in Fig. 3.2 and expressed as

$$\left(\frac{\phi M_n}{\phi M_m}\right)^3 + \left(\frac{\phi V_n}{\phi V_m}\right)^3 = R^3;\ R = 1 \qquad (3\text{–}3)$$

Additional curves are included in Fig. 3.2 with values of $R$ ranging from 0.6 to 1.2. The factored loads at an opening, $V_u$ and $M_u$, are checked using the interaction curve by plotting the point $(V_u/\phi V_m,\ M_u/\phi M_m)$. If the point lies inside the $R = 1$ curve, the opening meets the requirements of Eqs. 3-1 and 3-2, and the design is satisfactory. If the point lies outside the curve, the design is not satisfactory. A large-scale version of Fig. 3.2, suitable for design, is presented in Fig. A.1 of Appendix A.

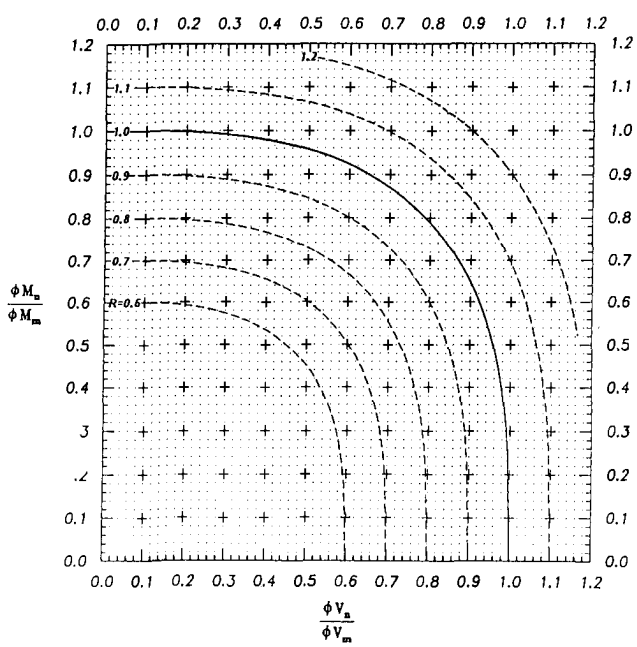


*Fig 3.2. Design interaction curves. $R = V_u/\phi V_n = M_u/\phi M_n$.*

The value of $R$ at the point $(V_u/\phi V_m,\ M_u/\phi M_m)$ allows $\phi V_n$ *and* $\phi M_n$ to be obtained from the applied loads.

$$\phi V_n = \frac{V_u}{R} \qquad (3\text{–}4a)$$

$$\phi M_n = \frac{M_u}{R} \qquad (3\text{–}4b)$$

Alternatively, $\phi V_n$ and $\phi M_n$ can be calculated directly.

$$\phi V_n = \phi V_m \left[\frac{\left(\dfrac{M_u}{\phi M_m}\right)^3}{\left(\dfrac{V_u}{\phi V_m}\right)^3} + 1\right]^{-1/3} \qquad (3\text{–}5a)$$

$$\phi M_n = \phi V_n\left(\frac{M_u}{V_u}\right) = \phi M_m \left[\frac{\left(\dfrac{V_u}{\phi V_m}\right)^3}{\left(\dfrac{M_u}{\phi M_m}\right)^3} + 1\right]^{-1/3} \qquad (3\text{–}5b)$$

## 3.5 EQUATIONS FOR MAXIMUM MOMENT CAPACITY, $M_m$

The equations presented in this section may be used to calculate the maximum moment capacity of steel (Fig 3.3) and composite (Fig. 3.4) members constructed with compact steel sections. The equations are presented for rectangular openings. Guidelines are presented in section 3.7 to allow the expressions to be used for circular openings.

The openings are of length, $a_o$, height, $h_o$, and may have an eccentricity, $e$, which is measured from the center line of the steel section. For steel members, $e$ is positive, whether the opening is above or below the center line. For composite members, $e$ is positive in the upward direction.

The portion of the section above the opening (the top tee) has a depth $s_t$, while the bottom tee has a depth of $s_b$. If reinforcement is used, it takes the form of bars above and below the opening, welded to one or both sides of the web. The area of the reinforcement on each side of the opening is $A_r$.

For composite sections, the slab is of total depth, $t_s$, with

a minimum depth of $t_s'$. Other dimensions are as shown in Figs. 3.3 and 3.4.

**a. Steel beams**

The nominal capacity of a steel member with a web opening in pure bending, $M_m$, is expressed in terms of the capacity of the member without an opening, $M_p$.

*Unreinforced openings*

For members with unreinforced openings,

$$M_m = M_p \left[ 1 - \frac{\Delta A_s \left( \frac{h_o}{4} + e \right)}{Z} \right] \qquad (3\text{–}6)$$

in which

$M_p = F_y Z$
$\Delta A_s = h_o t_w$
$h_o$ = depth of opening
$t_w$ = thickness of web
$e$ = eccentricity of opening = $|e|$
$Z$ = plastic section modulus of member without opening
$F_y$ = yield strength of steel

*Reinforced openings*

For members with reinforced openings,

$$M_m = M_p \left[ 1 - \frac{t_w \left( \frac{h_o^2}{4} + h_o e - e^2 \right) - A_r h_o}{Z} \right] \le M_p$$

for $t_w e < A_r$ (3–7)

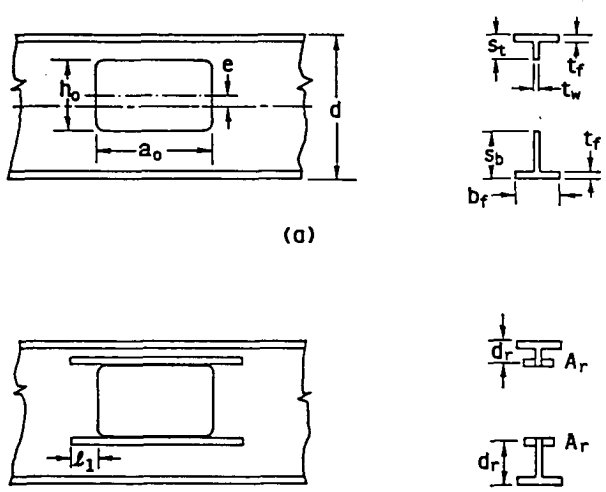


*Fig. 3.3. Opening configurations for steel beams, (a) Unreinforced opening, (b) reinforced opening.*

$$M_m = M_p \left[ 1 - \frac{\Delta A_s \left( \frac{h_o}{4} + e - \frac{A_r}{2t_w} \right)}{Z} \right] \le M_p$$

for $t_w e \ge A_r$ (3–8)

in which $\Delta A_s = h_o t_w - 2A_r$

**b. Composite beams**

The expressions for the nominal capacity of a composite member with a web opening (Fig. 3.4) in pure bending, $M_m$, apply to members both with and without reinforcement.

*Plastic neutral axis above top of flange*

For beams in which the plastic netural axis, PNA, *in the unperforated member* is located at or above the top of the flange,

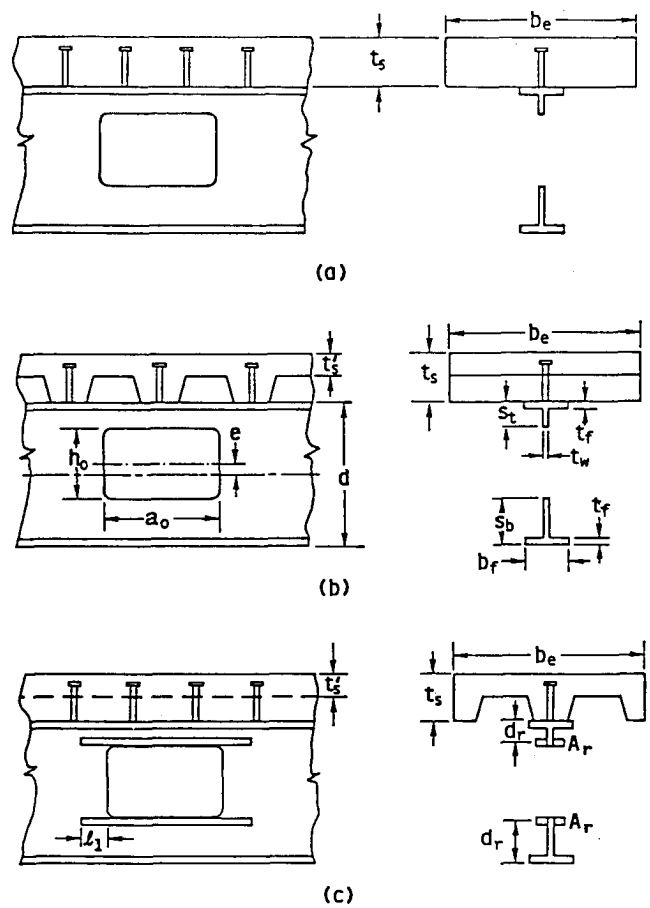


*Fig. 3.4. Opening configurations for composite beams. (a) Unreinforced opening, solid slab, (b) unreinforced opening, ribbed slab with transverse ribs, (c) reinforced opening, ribbed slab with longitudinal ribs.*

the value of $M_m$ may be approximated in terms of the capacity of the unperforated section, $M_{pc}$.

$$M_m = M_{pc}\left[\frac{A_{sn}}{A_s} + \frac{F_y \Delta A_s e}{M_{pc}}\right] \leq M_{pc} \qquad (3\text{-}9)$$

in which

$M_{pc}$ = nominal capacity of the unperforated composite section, at the location of the opening

$A_s$ = cross-sectional area of steel in the unperforated member

$A_{sn}$ = net area of steel section with opening and reinforcement

$A_s - h_o t_w + 2A_r = A_s - \Delta A_s$

$\Delta A_s$ $h_o t_w - 2A_r$

$e$ = eccentricity of opening, positive upward

Equation 3-9 is always conservative for $A_{sn} \leq A_s$. The values of $M_{pc}$ can be conveniently obtained from Part 4 of the AISC *Load and Resistance Factor Design Manual* (AISC 1986a).

*Plastic neutral axis below top of flange*

For beams in which the PNA *in the unperforated member* is located below the top of the flange and $P_c \geq P_{c\,min} = F_y(\frac{3}{4} t_w d - \Delta A_s)$, the value of $M_m$ may be approximated using

$$M_m = F_y A_{sn}\frac{d}{2} + F_y \Delta A_s e + P_c\left(t_s - \frac{\bar{a}}{2}\right) \leq M_{pc} \qquad (3\text{-}10)$$

in which

$t_s$ = thickness of slab

$\bar{a}$ = depth of concrete stress block = $\dfrac{P_c}{0.85 f'_c b_e}$

$P_c$ = force in the concrete (Fig. 3.5)

$P_c$ is limited by the concrete capacity, the stud capacity from the high moment end of the opening to the support, and the tensile capacity of the net steel section.

$$P_c \leq 0.85 f'_c b_e t_e \qquad (3\text{-}11a)$$

$$P_c \leq N Q_n \qquad (3\text{-}11b)$$

$$P_c \leq F_y A_{sn} \qquad (3\text{-}11c)$$

in which

$t_e$ = $t_s$ for solid slabs

$t_e$ = $t'_s$ for ribbed slabs with transverse ribs

$t_e$ = $(t_s + t'_s)/2$ for ribbed slabs with longitudinal ribs

$N$ = number of shear connectors between the high moment end of the opening and the support

$Q_n$ = individual shear connector capacity, including reduction factor for ribbed slabs (AISC 1986b)

$b_e$ = effective width of concrete slab (AISC 1986b)

Equation 3-10 is also accurate for members with the PNA in the unperforated section located at or above the top of the flange.

If $P_c < F_y(\frac{3}{4} t_w d - \Delta A_s)$, the more accurate expressions given in section 5.5 should be used to calculate $M_m$.

## 3.6 EQUATIONS FOR MAXIMUM SHEAR CAPACITY, $V_m$

The equations presented in this section may be used to calculate the maximum shear strength of steel and composite members constructed with compact steel sections. The equations are presented for rectangular openings and used to develop design aids, which are presented at the end of this section and in Appendix A. Guidelines are presented in the next section to allow the expressions to be used for circular openings. Dimensions are as shown in Figs. 3.3 and 3.4.

The maximum nominal shear capacity at a web opening, $V_m$, is the sum of the capacities of the bottom and top tees.

$$V_m = V_{mb} + V_{mt} \qquad (3\text{-}12)$$

### a. General equation

$\alpha_v$, the ratio of nominal shear capacity of a tee, $V_{mb}$

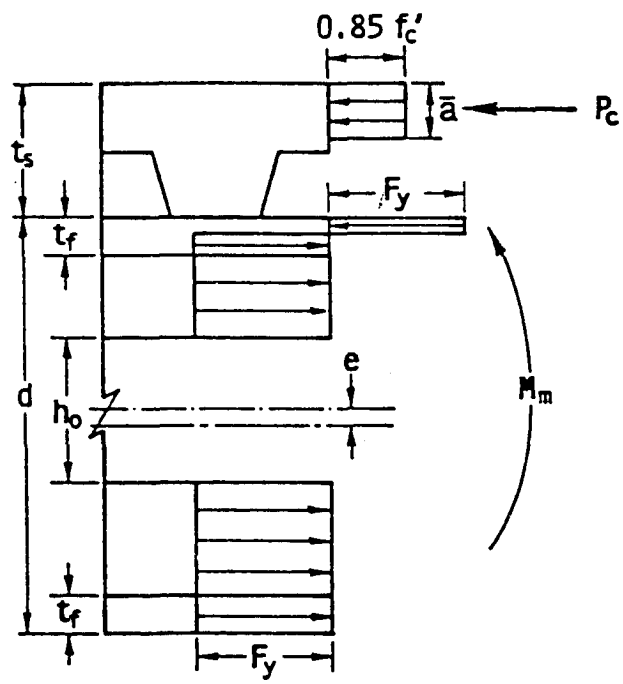


*Fig. 3.5. Region at web opening at maximum moment, composite beam.*

or $V_{mt}$, to the plastic shear capacity of the web of the tee, $V_{pb}$ or $V_{pt}$, is calculated as

$$\alpha_v = \frac{V_{mb}}{V_{pb}} \text{ or } \frac{V_{mt}}{V_{pt}} = \frac{\sqrt{6} + \mu}{\nu + \sqrt{3}} \leq 1 \qquad (3\text{-}13)$$

in which $V_{pb}$ or $V_{pt} = \dfrac{F_y t_w s}{\sqrt{3}}$

$\nu$ = aspect ratio of tee = $\dfrac{a_o}{s}$, use $\nu = \dfrac{a_o}{\bar{s}}$ when reinforcement is used

$s$ = depth of tee, $s_b$ or $s_t$

$\bar{s}$ = $s - \dfrac{A_r}{2b_f}$, used to calculate $\nu$ when reinforcement is used

$b_f$ = width of flange

$a_o$ = length of opening

Subscripts "b" and "t" indicate the bottom and top tees, respectively.

$$\mu = \frac{2P_r d_r + P_{ch} d_h - P_{cl} d_l}{V_p s} \qquad (3\text{-}14)$$

in which (see Fig. 3.5)

$V_p$ $V_{pb}$ or $V_{pt}$

$P_r$ = force in reinforcement along edge of opening

$$F_y A_r \leq \frac{F_y t_w a_o}{2\sqrt{3}}$$

$d_r$ = distance from outside edge of flange to centroid of reinforcement

$P_{ch}$ and $P_{cl}$ = concrete forces at high and low moment ends of opening, respectively. For top tee in composite sections only. See Eqs. 3-15a through 3-16.

$d_h$ and $d_l$ = distances from outside edge of top flange to centroid of concrete force at high and low moment ends of opening, respectively. For top tee in composite sections only. See Eqs. 3-17 through 3-18b.

For reinforced openings, s should be replaced by $\bar{s}$ in the calculation of $\nu$ only.

For tees without concrete, $\mu = 2P_r d_r/(V_p s)$. For tees without concrete or reinforcement, $\mu = 0$. For eccentric openings, $s_b \neq s_t$ and $\nu_b \neq \nu_t$.

Equations 3-13 and 3-14 are sufficient for all types of construction, with the exception of top tees in composite beams which are covered next.

### b. Composite beams

The following expressions apply to the *top tee of composite members.* They are used in conjunction with Eqs. 3-13 and 3-4,

$P_{ch}$, the concrete force at the high moment end of the opening (Eq. 3-14, Fig. 3.6), is

$$P_{ch} \leq 0.85 f'_c b_e t_e \qquad (3\text{-}15a)$$

$$P_{ch} \leq NQ_n \qquad (3\text{-}15b)$$

$$P_{ch} \leq F_y A_{st} \qquad (3\text{-}15c)$$

in which $A_{st}$ = net steel area of top tee

$P_{cl}$, the concrete force at the low moment end of the opening (Fig. 3.6), is

$$P_{cl} = P_{ch} - N_o Q_n \geq 0 \qquad (3\text{-}16)$$

in which $N_o$ = number of shear connectors over the opening.

$N$ in Eq. 3-15b and $N_o$ in Eq. 3-16 include only connectors completely within the defined range. For example, studs on the edges of an opening are not included.

$d_h$ and $d_l$, the distances from the top of the flange to the centroid of the concrete force at the high and the low moment ends of the opening, respectively, are

$$d_h = t_s - \frac{P_{ch}}{1.7 f'_c b_e} \qquad (3\text{-}17)$$

$$d_l = \frac{P_{cl}}{1.7 f'_c b_e} \text{ for solid slabs} \qquad (3\text{-}18a)$$

$$d_l = t_s - t'_s + \frac{P_{cl}}{1.7 f'_c b_e} \text{ for ribbed slabs with transverse ribs} \qquad (3\text{-}18b)$$

For ribbed slabs with longitudinal ribs, $d_l$ is based on the centroid of the compressive force in the concrete considering all ribs that lie within the effective width $b_e$ (Fig. 3.4). In this case, $d_l$ can be conservatively obtained using Eq. 3-18a, replacing $b_e$ by $b_{em}$, the sum of the minimum rib widths for the ribs that lie within $b_e$.

If the ratio of $V_{mt}$ to $V_{pt}$ in Eq. 3-13 exceeds 1, then an alternate expression must be used.

$$\alpha_v = \frac{V_{mt}}{V_{pt}} = \frac{\mu}{\nu} \geq 1 \qquad (3\text{-}19)$$

in which $\nu = a_o/s$ for both reinforced and unreinforced openings.

To evaluate $\mu$ in Eq. 3-19, the value of $P_{ch}$ in Eq. 3-15 must be compared with the tensile force in the flange and reinforcement, since the web has fully yielded in shear.

$$P_{ch} \leq F_y[t_f(b_f - t_w) + A_r] \qquad (3\text{-}20)$$

in which

$b_d$ = width of flange

$t_f$ = thickness of flange

Equation 3-20 takes the place of Eq. 3-15c.

If Eq. 3-20 governs $P_{ch}$ instead of Eq. 3-15, $P_{cl}$, $d_h$, $d_l$, and $\mu$ must also be recalculated using Eqs. 3-16, 3-17, 3-18, and 3-14, respectively.

Finally, $V_{mt}$ must not be greater than the pure shear capacity of the top tee, $V_{mt}(sh)$.

$$V_{mt}(sh) = V_{pt} + 0.11\, f_c'^{1/2} A_{vc}, \text{ kips} \qquad (3\text{-}21)$$

in which $f_c'$ and $f_c'^{1/2}$ are in ksi

$A_{vc}$ = effective concrete shear area = $3t_s t_e$.

**c. Design aids**

A design aid representing $\alpha_v$ from Eq. 3-13 is presented in Figs. 3.7 and A.2 for values of $\nu$ ranging from 0 to 12 and values of $\mu$ ranging from 0 to 11. This design aid is applicable to unreinforced and reinforced tees without concrete, as well as top tees in composite members, with $\alpha_v$ ($V_{mb}/V_{pb}$ or $V_{mt}/V_{pr}$) less than or equal to 1.

A design aid for $\alpha_v$ from Eq. 3-19 for the top tee in composite members with $\alpha_v \geq 1$ is presented in Figs. 3.8 and A.3. This design aid is applicable for values of $\nu$ from 0 to 12 and values of $\mu$ from 0.5 to 23. If $\alpha_v > 1$, $\mu$ must be recalculated if Eq. 3-20 controls $P_{ch}$, and a separate check must be made for $V_{mt}$(sh) using Eq. 3-21.

The reader will note an offset at $\alpha_v = 1$ between Figs. A.2 and A.3 (Figs. 3.7 and 3.8). This offset is the result of a discontinuity between Eqs. 3-13 and 3-19 at $\nu = \mu$. If $\alpha_v$ appears to be $\geq 1$ on Fig. A.2 and $\leq 1$ on Fig. A.3, use $\alpha_v = 1$.

## 3.7 GUIDELINES FOR PROPORTIONING AND DETAILING BEAMS WITH WEB OPENINGS

To ensure that the strength provided by a beam at a web opening is consistent with the design equations presented in sections 3.4-3.6, a number of guidelines must be followed. Unless otherwise stated, these guidelines apply to unreinforced and reinforced web openings in both steel and composite beams. All requirements of the AISC Specifications (AISC 1986b) should be applied. The steel sections should meet the AISC requirements for compact sections in both composite and non-composite members. $F_y \leq 65$ ksi.

**a. Stability considerations**

To ensure that local instabilities do not occur, consideration must be given to local buckling of the compression flange, web buckling, buckling of the tee-shaped compression zone above or below the opening, and lateral buckling of the compression flange.

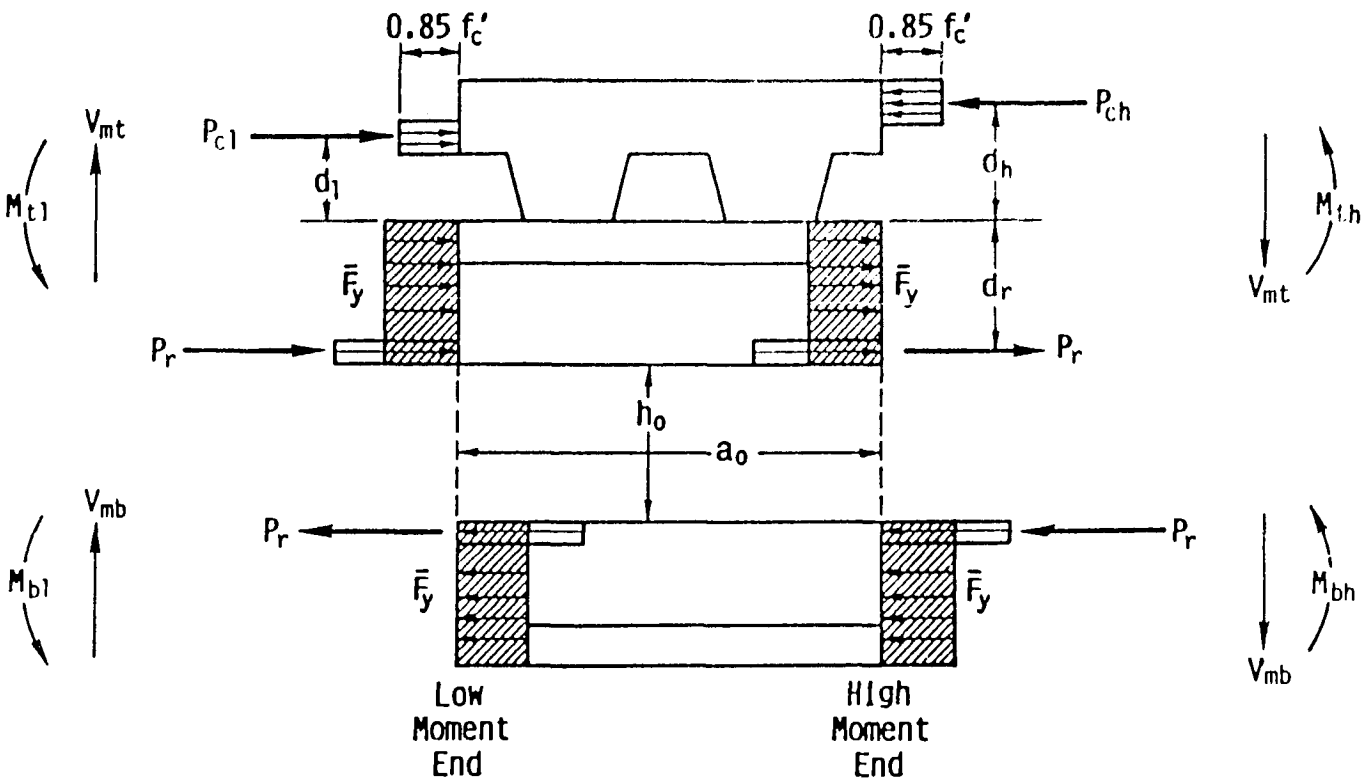


*Fig. 3.6. Region at web opening under maximum shear.*

*1. Local buckling of compression flange or reinforcement*

To ensure that local buckling does not occur, the AISC (AISC 1986b) criteria for compact sections applies. The width to thickness ratios of the compression flange or web reinforcement are limited by

$$\frac{b}{t} \leq \frac{65}{\sqrt{F_y}} \tag{3-22}$$

in which

$b$ = projecting width of flange or reinforcement
$t$ = thickness of flange or reinforcement
$F_y$ = yield strength in ksi

For a flange of width, $b_f$, and thickness, $t_f$, Eq. 3-22 becomes

$$\frac{b_f}{2t_f} \leq \frac{65}{\sqrt{F_y}} \tag{3-23}$$

*2. Web buckling*

To prevent buckling of the web, two criteria should be met:

(a) The opening parameter, $p_o$, should be limited to a maximum value of 5.6 for steel sections and 6.0 for composite sections.

$$p_o = \frac{a_o}{h_o} + \frac{6h_o}{d} \tag{3-24}$$

in which $a_o$ and $h_o$ = length and width of opening, respectively, $d$ = depth of steel section

(b) The web width-thickness ratio should be limited as follows

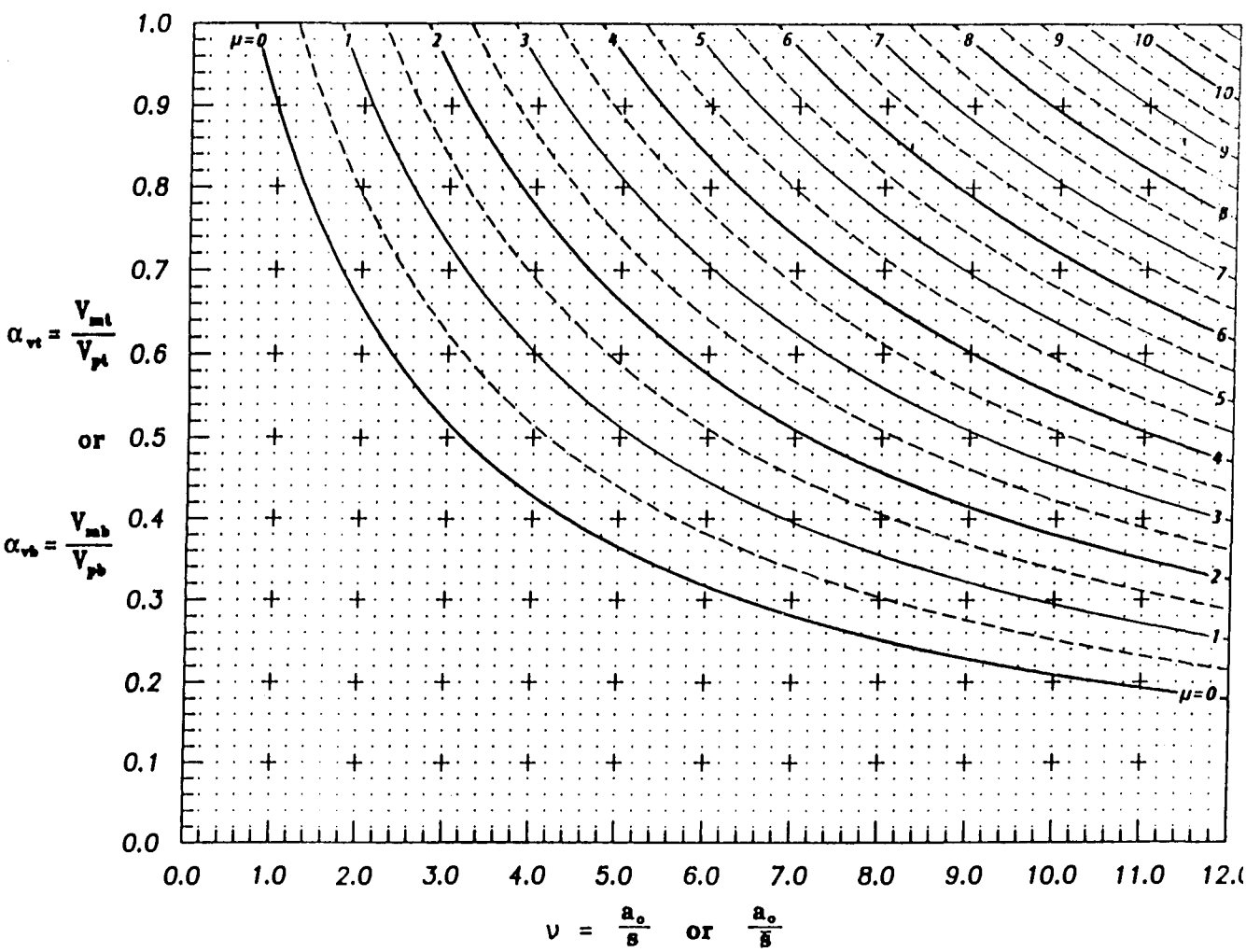


*Fig. 3.7. Design aid relating $a_v$, the ratio of the nominal maximum shear strength to the plastic shear strength of a tee, to v, the ratio of length to depth or effective length to depth of a tee. $V_{mb}/V_{pb}$ or $V_{mt}/V_{pt} \leq 1$.*

$$\frac{d - 2t_f}{t_w} \leq \frac{520}{\sqrt{F_y}} \qquad (3\text{-}25)$$

in which $t_w$ = thickness of web

If $(d - 2t_f)/t_w \leq 420/\sqrt{F_y}$, the web qualifies as stocky. In this case, the upper limit on $a_o/h_o$ is 3.0 and the upper limit on $V_m$ (maximum nominal shear capacity) for non-composite sections is $\frac{2}{3}\overline{V}_p$, in which $\overline{V}_p = F_y t_w d/\sqrt{3}$, the plastic shear capacity of the unperforated web. For composite sections, this upper limit may be increased by $\overline{V}_c$ which equals $V_{pt}(\mu/\nu - 1) \geq 0$, or $V_{mt}(sh) - V_{pt}$, whichever is less. All standard rolled W shapes (AISC 1986a) qualify as stocky members.

If $420/\sqrt{F_y} < (d - 2t_f)/t_w \leq 520/\sqrt{F_y}$, then $a_o/h_o$ should be limited to 2.2, and $V_m$ should be limited to 0.45 $\overline{V}_p$ for both composite and non-composite members.

The limits on opening dimensions to prevent web buckling, along with an additional criterion from section 3.7bl, are summarized in Fig. 3.9.

*3. Buckling of tee-shaped compression zone*

For steel beams only: The tee which is in compression should be investigated as an axially loaded column following the procedures of AISC (1986b). For unreinforced members this is not required when the aspect ratio of the tee ($\nu = a_o/s$) is less than or equal to 4. For reinforced openings, this check is only required for large openings in regions of high moment.

*4. Lateral buckling*

For steel beams only: In members subject to lateral buckling of the compression flange, strength should not be governed by strength at the opening (calculated without regard to lateral buckling).

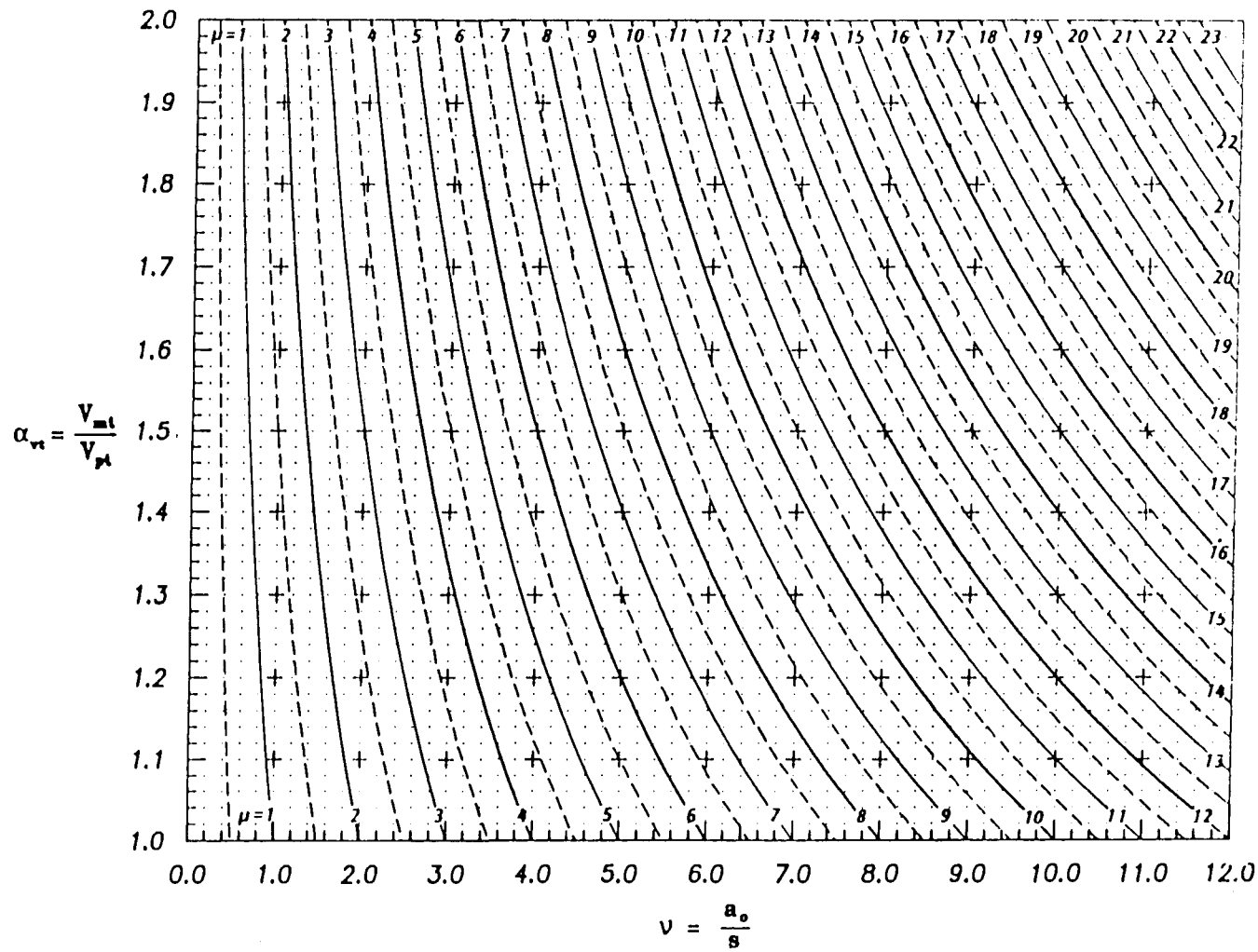


*Fig. 3.8. Design aid relating $\alpha_v$, the ratio of the nominal maximum shear strength to the plastic shear strength of the top tee, to $\nu$, the length-to-depth ratio of the tee. $1 \leq V_{mt}/V_{pt} \leq 2$ composite members only.*

In members with unreinforced openings or reinforced openings with the reinforcement placed on both sides of the web, the torsional constant, $J$, should be multiplied by

$$\left[1 - \left(\frac{a_o}{L_b}\right) \frac{\Delta A_s}{t_w(d + 2b_f)}\right]^2 \leq 1 \quad (3\text{-}26)$$

in which $L_b$ = unbraced length of compression flange

$$\Delta A_s = h_o t_w - 2A_r$$

In members reinforced on only one side of the web, $A_r = 0$ for the calculation of $\Delta A_s$ in Eq. 3-26. Members reinforced on one side of the web should not be used for long laterally unsupported spans. For shorter spans the lateral bracing closest to the opening should be designed for an additional load equal to 2 percent of the force in the compression flange.

## b. Other considerations

*1. Opening and tee dimensions*

Opening dimensions are restricted based on the criteria in section 3.7a. Additional criteria also apply.

The opening depth should not exceed 70 percent of the section depth ($h_o \leq 0.7d$). The depth of the top tee should not be less than 15 percent of the depth of the steel section ($s_t \geq 0.15d$). The depth of the bottom tee, $s_b$, should not be less than $0.15d$ for steel sections or $0.12d$ for composite sections. The aspect ratios of the tees ($\nu = a_o/s$) should not be greater than 12 ($a_o/s_b \leq 12$, $a_o/s_t \leq 12$).

*2. Comer radii*

The corners of the opening should have minimum radii at least 2 times the thickness of the web, $2t_w$, or ⅝ in., whichever is greater.

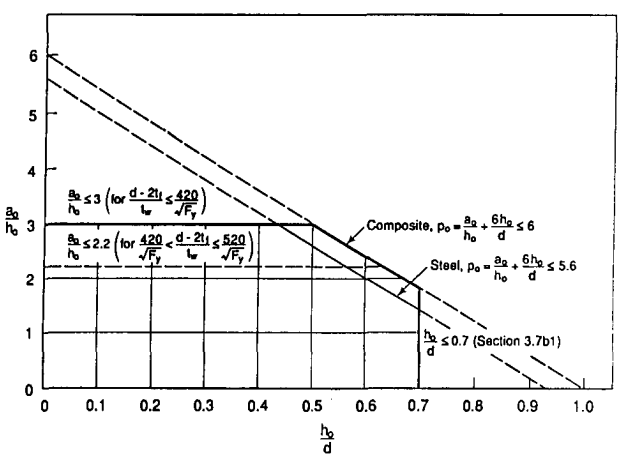


*Fig. 3.9. Limits on opening dimensions.*

*3. Concentrated loads*

No concentrated loads should be placed above an opening.

Unless needed otherwise, bearing stiffeners are not required to prevent web crippling in the vicinity of an opening due to a concentrated load if

$$(1)\ \frac{d - 2t_f}{t_w} \leq \frac{420}{\sqrt{F_y}} \quad (3\text{-}27a)$$

$$\frac{b}{t} \leq \frac{54}{\sqrt{F_y}} \quad (3\text{-}27b)$$

and the load is placed at least $d/2$ from the edge of the opening,

or

$$(2)\ \frac{d - 2t_f}{t_w} \leq \frac{520}{\sqrt{F_y}} \quad (3\text{-}28a)$$

$$\frac{b}{t} \leq \frac{65}{\sqrt{F_y}} \quad (3\text{-}28b)$$

and the load is placed at least $d$ from the edge of the opening.

In any case, the edge of an opening should not be closer than a distance $d$ to a support.

*4. Circular openings*

Circular openings may be designed using the expressions in sections 3.5 and 3.6 by using the following substitutions for $h_o$ and $a_o$.

Unreinforced web openings:

$$h_o = D_o \text{ for bending} \quad (3\text{-}29a)$$
$$h_o = 0.9\, D_o \text{ for shear} \quad (3\text{-}29b)$$
$$a_o = 0.45\, D_o \quad (3\text{-}29c)$$

in which $D_o$ = diameter of circular opening.

Reinforced web openings:

$$h_o = D_o \text{ for bending and shear} \quad (3\text{-}30a)$$
$$a_o = 0.45\, D_o \quad (3\text{-}30b)$$

*5. Reinforcement*

Reinforcement should be placed as close to an opening as possible, leaving adequate room for fillet welds, if required on both sides of the reinforcement. Continuous welds should be used to attach the reinforcement bars. A fillet weld may be used on one or both sides of the bar within the length of the opening. However, fillet welds should be used on both sides of the reinforcement on extensions past the opening. The required strength of the weld within the length of the opening is,

$$R_{wr} = \phi 2P_r \quad (3\text{-}31)$$

in which

$R_{wr}$ = required strength of the weld

$\phi$ = 0.90 for steel beams and 0.85 for composite beams

$P_r = F_y A_r \leq \dfrac{F_y t_w a_o}{2\sqrt{3}}$

$A_r$ = cross-sectional area of reinforcement above or below the opening.

Rev. 3/1/03

The reinforcement should be extended beyond the opening by a distance $\ell_1 = a_o/4$ or $A_r\sqrt{3}/(2t_w)$, whichever is greater, on each side of the opening (Figs 3.3 and 3.4). Within each extension, the required strength of the weld is

$$R_{wr} = \phi F_y A_r \tag{3-32}$$

If reinforcing bars are used on only one side of the web, the section should meet the following additional requirements.

$$A_r \leq \frac{A_f}{3} \tag{3-33}$$

$$\frac{a_o}{h_o} \leq 2.5 \tag{3-34}$$

$$\frac{s_t}{t_w} \text{ or } \frac{s_b}{t_w} \leq \frac{140}{\sqrt{F_y}} \tag{3-35}$$

$$\frac{M_u}{V_u d} \leq 20 \tag{3-36}$$

in which $A_f$ = area of flange

$M_u$ and $V_u$ = factored moment and shear at centerline of opening, respectively.

*6. Spacing of openings*

Openings should be spaced in accordance with the following criteria to avoid interaction between openings.

Rectangular openings: $S \geq h_o$ (3-37a)

$$S \geq a_o\left(\frac{V_u/\phi\overline{V}_p}{1 - V_u/\phi\overline{V}_p}\right) \tag{3-37b}$$

Circular openings: $S \geq 1.5\ D_o$ (3-38a)

$$S \geq D_o\left(\frac{V_u/\phi\overline{V}_p}{1 - V_u/\phi\overline{V}_p}\right) \tag{3-38b}$$

in which $S$ = clear space between openings.

In addition to the requirements in Eqs. 3-37 and 3-38, openings in composite beams should be spaced so that

$$S \geq a_o \tag{3-39a}$$

$$S \geq 2.0\ d \tag{3-39b}$$

Rev. 3/1/03

**c. Additional criteria for composite beams**

In addition to the guidelines presented above, composite members should meet the following criteria.

*1. Slab reinforcement*

Transverse and longitudinal slab reinforcement ratios should be a minimum of 0.0025, based on the *gross* area of the slab, within a distance $d$ or $a_o$, whichever is greater, of the opening. For beams with longitudinal ribs, the transverse reinforcement should be below the heads of the shear connectors.

*2. Shear connectors*

In addition to the shear connectors used between the high moment end of the opening and the support, a minimum of two studs per foot should be used for a distance $d$ or $a_o$, whichever is greater, from the high moment end of the opening toward the direction of *increasing* moment.

*3. Construction loads*

If a composite beam is to be constructed without shoring, the section at the web opening should be checked for adequate strength as a *non-composite* member under factored dead and construction loads.

## 3.8 ALLOWABLE STRESS DESIGN

The safe and accurate design of members with web openings requires that an ultimate strength approach be used. To accommodate members designed using ASD, the expressions presented in this chapter should be used with $\phi$ = 1.00 and a load factor of 1.7 for both dead and live loads. These factors are in accord with the Plastic Design Provisions of the AISC ASD Specification (1978).

# Chapter 4
# DESIGN SUMMARIES AND EXAMPLE PROBLEMS

## 4.1 GENERAL

Equations for maximum bending capacity and details of opening design depend on the presence or absence of a composite slab and opening reinforcement. However, the overall approach, the basic shear strength expressions, and the procedures for handling the interaction of bending and shear are identical for all combinations of beam type and opening configuration. Thus, techniques that are applied in the design of one type of opening can be applied to the design of all.

Tables 4.1 through 4.4 summarize the design sequence, design equations and design aids that apply to steel beams with unreinforced openings, steel beams with reinforced openings, composite beams with unreinforced openings, and composite beams with reinforced openings, respectively. Table 4.5 summarizes proportioning and detailing guidelines that apply to all beams.

Sections 4.2 through 4.6 present design examples. The examples in sections 4.2, 4.4, 4.5, and 4.6 follow the LRFD approach. In section 4.3, the example in section 4.2 is resolved using the ASD approach presented in section 3.8.

A typical design sequence involves cataloging the properties of the section, calculating appropriate properties of the opening and the tees, and checking these properties as described in sections 3.7a and b. The strength of a section is determined by calculating the maximum moment and shear capacities and then using the interaction curve (Fig. A.1) to determine the strength at the opening under the combined effects of bending and shear.

Designs are completed by checking for conformance with additional criteria in sections 3.7b and c.

**Table 4.1**
**Design of Steel Beams with Unreinforced Web Openings**

*See sections 3.7a1-3.7b1 or Table 4.5 a1-b1 for proportioning guidelines.*

Calculate maximum moment capacity: Use Eq. 3-6.

$$M_m = M_p \left[ 1 - \frac{\Delta A_s \left( \frac{h_o}{4} + e \right)}{Z} \right] \tag{3-6}$$

in which $\Delta A_s = h_w t_w$ and $M_p = F_y Z$.

*Calculate maximum shear capacity:* Use Fig. A.2 or Eq. 3-13 to obtain $\alpha_v$. For the bottom tee, use $\nu = a_o/s_b$ and $\mu = 0$. For the top tee, use $\nu = a_o/s_t$ and $\mu = 0$.

$$V_{mb} = V_{pb}\alpha_{vb} \text{ and } V_{mt} = V_{pt}\alpha_{vt}$$

$$\alpha_v = \frac{\sqrt{6} + \mu}{\nu + \sqrt{3}} = \frac{\sqrt{6}}{\nu + \sqrt{3}} \leq 1 \tag{3-13}$$

in which $V_{pb} = \dfrac{F_y t_w s_b}{\sqrt{3}}$ and $V_{pt} = \dfrac{F_y t_w s_t}{\sqrt{3}}$

$$V_m = V_{mb} + V_{mt} \leq \tfrac{2}{3}\overline{V}_p \tag{3-12}$$

*Check moment-shear interaction:* Use Fig. A.1 with $\phi = 0.9$. $R \leq 1.0$.

*See sections 3.7b2-3.7b4 and 3.7b6 or Table 4.5b2-b4 and b6 for other guidelines.*

**Table 4.2**
**Design of Steel Beams with Reinforced Web Openings**

*See sections 3.7al-3.7bl or Table 4.5 al-bl for proportioning guidelines.*

*Calculate maximum moment capacity:* Use Eq. 3-7 or Eq. 3-8.

$$M_m = M_p \left[ 1 - \frac{t_w \left( \frac{h_o^2}{4} + h_o e - e^2 \right) - A_r h_o}{Z} \right] \leq M_p \tag{3-7}$$

for $t_w e < A_r$

$$M_m = M_p \left[ 1 - \frac{\Delta A_s \left( \frac{h_o}{4} + e - \frac{A_r}{2t_w} \right)}{Z} \right] \leq M_p \tag{3-8}$$

for $t_w e \geq A_r$

in which $\Delta A_s = h_o t_w - 2A_r$ and $M_p = F_y Z$.

*Calculate maximum shear capacity:* Use Fig. A.2 or Eq. 3–13 to obtain $\alpha_v$. For the bottom tee, use $\nu = a_o/(\bar{s}_b)$ and $\mu = P_r d_r/(V_{pb} s_b)$. For the top tee, use $\nu = a_o/(\bar{s}_t)$ and $\mu = P_r d_r/(V_{pt} s_t)$.

$$V_{mb} = V_{pb}\alpha_{vb} \text{ and } V_{mt} = V_{pt}\alpha_{vt}$$

$$\alpha_v = \frac{\sqrt{6} + \mu}{\nu + \sqrt{3}} \leq 1 \tag{3-13}$$

in which

$$V_{pb} = \frac{F_y t_w s_b}{\sqrt{3}} \text{ and } V_{pt} = \frac{F_y t_w s_t}{\sqrt{3}}$$

$$\bar{s} = s - \frac{A_r}{2b_f} \text{ and } P_r = F_y A_r \leq \frac{F_y t_w a_o}{2\sqrt{3}}$$

$$V_m = V_{mb} + V_{mt} \leq \tfrac{2}{3}\bar{V}_p \tag{3–12}$$

*Check moment-shear interaction:* Use Fig. A.1 with $\phi = 0.9$. $R \leq 1.0$.
*See sections 3.7b2-3.7b6 or Table 4.5 b2-b6 for other guidelines.*

**Table 4.3**
**Design of Composite Beams with Unreinforced Web Openings**

*See sections 3.7a1, 3.7a2, and 3.7b1 or Table 4.5 a1-a3 for proportioning guidelines.*

*Calculate maximum moment capacity:* Use Eq. 3-9 or Eq. 3-10.

When PNA in unperforated member is above top of flange, use Eq. 3-9 or Eq. 3-10. When PNA in unperforated member is below top of flange and $P_c \geq P_{c\,min} = F_y(\frac{3}{4}t_w d - \Delta A_s)$, use Eq. 3-10.

$$M_m = M_{pc}\left[\frac{A_{sn}}{A_s} + \frac{F_y \Delta A_s e}{M_{pc}}\right] \tag{3-9}$$

$$M_m = F_y A_{sn}\frac{d}{2} + F_y \Delta A_s e + P_c\left(t_s - \frac{\bar{a}}{2}\right) \tag{3-10}$$

in which $M_{pc}$ = Plastic bending capacity of unperforated composite beam

$$\Delta A_s = h_o t_w \text{ and } A_{sn} = A_s - \Delta A_s$$

$$\bar{a} = \frac{P_c}{0.85 f_c' b_e}$$

$$P_c \leq 0.85 f_c' b_e t_e \tag{3-11a}$$

$$P_c \leq NQ_n \tag{3-11b}$$

$$P_c \leq F_y A_{sn} \tag{3-11c}$$

*Calculate maximum shear capacity:* Use Fig. A.2 or Eq. 3-13 to obtain $\alpha_v$. For the bottom tee, use $\nu = a_o/s_b$ and $\mu = 0$. For the top tee, use $\nu = a_o/s_t$ and $\mu = (P_{ch}d_h - P_{cl}d_l)/(V_{pt}s_t)$. If $\mu > \nu$, use Fig. A.3 as described below.

$$V_{mb} = V_{pb}\alpha_{vb} \text{ and } V_{mt} = V_{pt}\alpha_{vt}$$

$$\alpha_v = \frac{\sqrt{6} + \mu}{\nu + \sqrt{3}} \leq 1 \tag{3-13}$$

$$\text{in which } V_{pb} = \frac{F_y t_w s_b}{\sqrt{3}} \text{ and } V_{pt} = \frac{F_y t_w s_t}{\sqrt{3}}$$

$$P_{ch} \leq 0.85 f_c' b_e t_e \tag{3-15a}$$

$$P_{ch} \leq NQ_n \tag{3-15b}$$

$$P_{ch} \leq F_y A_{st} \tag{3-15c}$$

$$P_{cl} = P_{ch} - N_o Q_n \geq 0 \tag{3-16}$$

$$d_h = t_s - \frac{P_{ch}}{1.7 f_c' b_e} \tag{3-17}$$

$$d_l = \frac{P_{cl}}{1.7 f_c' b_e} \text{ for solid slabs} \tag{3-18a}$$

$$d_l = t_s - t_s' + \frac{P_{cl}}{1.7 f_c' b_e} \tag{3-18b}$$

for ribbed slabs with transverse ribs

For the top tee, if $\mu > \nu$, use Fig. A.3 or Eq. 3-19 to obtain $\alpha_{vt}$, and replace Eq. 3-15c with Eq. 3-20, with $A_r = 0$.

$$V_{mt} = V_{pt}\alpha_{vt}$$

$$\alpha_{vt} = \frac{\mu}{\nu} \geq 1 \tag{3-19}$$

$$P_{ch} \leq F_y[t_f(b_f - t_w) + A_r] = F_y t_f(b_f - t_w) \tag{3-20}$$

For all cases check:

$$V_{mt} \leq V_{mt}(sh) = V_{pt} + 0.11 f_c'^{1/2} A_{vc},\ f_c' \text{ in ksi} \tag{3-21}$$

$$V_m = V_{mb} + V_{mt} \leq \tfrac{2}{3}\bar{V}_p + \bar{V}_c \tag{3-12}$$

*Check moment-shear interaction:* Use Fig. A.1 with $\phi = 0.85$. $R \leq 1.0$.

*See sections 3.7b2–3.7b4 and 3.7b6–3.7c3 or Table 4.5 b2–b4 and b6–c3 for other guidelines.*

**Table 44**
**Design of Composite Beams with Reinforced Web Openings**

*See sections 3.7al, 3.7a2, and 3.7bl or Table 4.5 al-a3 for proportioning guidelines.*
*Calculate maximum moment capacity:* Use Eq. 3-9 or Eq. 3-10.

When PNA in unperforated member is above top of flange, use Eq. 3-9 or Eq. 3-10. When PNA in unperforated member is above top of flange, use Eq. 3-9 or Eq. 3-10. When PNA in unperforated member is below top of flange and $P_c \geq P_{c\,min} = F_y(\frac{3}{4}t_w d - \Delta A_s)$, use Eq. 3-10.

$$M_m = M_{pc}\left[\frac{A_{sn}}{A_s} + \frac{F_y \Delta A_s e}{M_{pc}}\right] \leq M_{pc} \tag{3-9}$$

$$M_m = F_y A_{sn}\frac{d}{2} + F_y \Delta A_s e + P_c\left(t_s - \frac{\bar{a}}{2}\right) \leq M_{pc} \tag{3-10}$$

in which $M_{pc}$ = Plastic bending capacity of unperforated composite beam

$$\Delta A_s = h_o t_w - 2A_r \text{ and } A_{sn} = A_s - \Delta A_s$$

$$\bar{a} = \frac{P_c}{0.85 f'_c b_e}$$

$$P_c \leq 0.85 f'_c b_e t_e \tag{3-11a}$$

$$P_c \leq NQ_n \tag{3-11b}$$

$$P_c \leq F_y A_{sn} \tag{3-11c}$$

*Calculate maximum shear capacity:* Use Fig. A.2 or Eq. 3-13 to obtain $\alpha_v$.

For the bottom tee, use $\nu = a_o/(\bar{s}_b)$ and $\mu = P_r d_r/(V_{pb} s_b)$. For the top tee, use $\nu = a_o/(\bar{s}_t)$ and $\mu = (2P_r d_r + P_{ch} d_h - P_{cl} d_l)/(V_{pt} s_t)$. If $\mu > \nu$, use Fig. A.3 as described below.

$$V_{mb} = V_{pb}\alpha_{vb} \text{ and } V_{mt} = V_{pt}\alpha_{vt}$$

$$\alpha_v = \frac{\sqrt{6} + \mu}{\nu + \sqrt{3}} \leq 1 \tag{3-13}$$

$$\text{in which } V_{pb} = \frac{F_y t_w s_b}{\sqrt{3}} \text{ and } V_{pt} = \frac{F_y t_w s_t}{\sqrt{3}}$$

$$\bar{s} = s - \frac{A_r}{2b_f} \text{ and } P_r = F_y A_r \leq \frac{F_y t_w a_o}{2\sqrt{3}}$$

$$P_{ch} \leq 0.85 f'_c b_e t_e \tag{3-15a}$$

$$P_{ch} \leq NQ_n \tag{3-15b}$$

$$P_{ch} \leq F_y A_{st} \tag{3-15c}$$

$$P_{cl} = P_{ch} - N_o Q_n \geq 0 \tag{3-16}$$

$$d_h = t_s - \frac{P_{ch}}{1.7 f'_c b_e} \tag{3-17}$$

$$d_l = \frac{P_{cl}}{1.7 f'_c b_e} \text{ for solid slabs} \tag{3-18a}$$

$$d_l = t_s - t'_s + \frac{P_{cl}}{1.7 f'_c} \text{ for ribbed slabs with transverse ribs} \tag{3-18b}$$

For the top tee, if $\mu > \nu$, use Fig. A.3 or Eq. 3-19 to obtain $\alpha_{vt}$, replace Eq. 3-15c with Eq. 3-20.

$$V_{mt} = V_{pt}\alpha_{vt}$$

$$\alpha_{vt} = \frac{\mu}{\nu} \geq 1 \tag{3-19}$$

$$P_{ch} \leq F_y[t_f(b_f - t_w) + A_r] \tag{3-20}$$

For all cases check: $V_{mt} \leq V_{mt}(sh) = V_{pt} + 0.11 f'^{1/2}_c A_{vc}$, $f'_c$ in ksi (3-21)

$$V_m = V_{mb} + V_{mt} \leq \tfrac{2}{3}\bar{V}_p + \bar{V}_c \tag{3-12}$$

*Check moment-shear interaction:* Use Fig. A.1 with $\phi = 0.85$. $R \leq 1.0$
*See sections 3.7b2-3.7c3 or Table 4.5 b2-c3 for other guidelines.*

**Table 4.5**
**Summary of Proportioning and Detailing Guidelines**

These guidelines apply to both steel and composite members, unless noted otherwise.

a. *Section properties and limits on* $V_m$
   1. Beam dimensions and limits on $V_m$
      (a) Width to thickness ratios of compression flange and web reinforcement, $b_f/(2t_f)$ and $b/t$, must not exceed $65/\sqrt{F_y}$ ($F_y \leq$ 65 ksi) (section 3.7al).
      (b) The width to thickness ratio of the web, $(d - 2t_f)/t_w$, must not exceed $520/\sqrt{F_y}$ If the ratio is $\leq 420/\sqrt{F_y}$, $a_o/h_o$ must not exceed 3.0, and $V_m$ must not exceed $\frac{2}{3}\overline{V}_p$ for steel beams or $\frac{2}{3}\overline{V}_p + \overline{V}_c$ for composite beams. If the ratio is $> 420/\sqrt{F_y}$ but $\leq 520/\sqrt{F_y}$, $a_o/h_o$ must not exceed 2.2, and $V_m$ must not exceed 0.45 $\overline{V}_p$. [$\overline{V}_p = F_y t_w d/\sqrt{3}$, $\overline{V}_c = V_{pt}(\mu/\nu - 1) \geq 0$ or $V_m(sh) - V_{pt}$, whichever is less] (section 3.7a2).
   2. Opening dimensions (See Fig. 3.9)
      (a) Limits on $a_o/h_o$ are given in a.l.(b) above.
      (b) $h_o$ must not exceed $0.7d$ (section 3.7bl).
      (c) The opening parameter, $p_o = (a_o/h_o) + (6h_o/d)$, must not exceed 5.6 for steel beams or 6.0 for composite beams (section 3.7a2).
   3. Tee dimensions
      (a) Depth [$s_t \geq 0.15d$, $s_b \geq 0.15d$ (steel beam), $s_b \geq 0.12d$ (composite)] (section 3.7bl).
      (b) Aspect ratio [$\nu \leq 12$] (section 3.7bl).

b. *Other considerations*
   1. Stability considerations. *Steel beams only*
      (a) Tees in compression must be designed as axially loaded columns. Not required for unreinforced openings if $\nu \leq 4$ or for reinforced openings, except in regions of high moment (section 3.7a3).
      (b) See requirements in section 3.7a4 for tees that are subject to lateral buckling.
   2. Corner radii
      Minimum radii = the greater of $2t_w$ or $\frac{5}{8}$ in. (section 3.7b2).
   3. Concentrated loads
      No concentrated loads should be placed above an opening. Edge of opening should not be closer than $d$ to a support. See section 3.7b3 for bearing stiffener requirements.
   4. Circular openings
      See section 3.7b4 for guidelines to design circular openings as equivalent rectangular openings.
   5. Reinforcement
      See section 3.7b5 for design criteria for placement and welding of reinforcement.
   6. Spacing of openings
      See section 3.7b6 for minimum spacing criteria.

c. *Additional criteria for composite beams*
   1. Slab reinforcement
      Minimum transverse and longitudinal slab reinforcement ratio within $d$ or $a_o$ (whichever is greater) of the opening is 0.0025, based on gross area of slab. For beams with longitudinal ribs, the transverse reinforcement should be below the heads of the shear connectors (section 3.7cl).
   2. Shear connectors
      In addition to shear connectors between the high moment end of opening and the support, use a minimum of two studs per foot for a distance $d$ or $a_o$ (whichever is greater) from high moment end of opening toward direction of increasing moment (section 3.7c2).
   3. Construction loads
      Design the section at the web opening as a non-composite member under factored dead and construction loads, if unshored construction is used (section 3.7c3)

## 4.2 EXAMPLE 1: STEEL BEAM WITH UNREINFORCED OPENING

A W24X55 section supports uniform loads $w_d$ = 0.607 kips/ft and $w_l$ = 0.8 kips/ft on a 36-foot simple span. The beam is laterally braced throughout its length. ASTM A36 steel is used.

Determine where an unreinforced 10x20 in. rectangular opening with a downward eccentricity of 2 in. (Fig. 4.1) can be placed in the span.

*Loading:*

$w_u$ = 1.2 X 0.607 + 1.6 x 0.8 = 2.008 kips/ft

Shear and moment diagrams are shown in Fig. 4.2.

*Section properties:*

| | | | |
|---|---|---|---|
| $A_s$ | = 16.2 in. | $b_f$ | = 7.005 in. |
| $d$ | = 23.57 in. | $t_f$ | = 0.505 in. |
| $t_w$ | = 0.395 in. | $Z$ | = 134 in. |

*Opening and tee properties:*

| | | | |
|---|---|---|---|
| $h_o$ | = 10 in. | $s_b$ | = 4.785 in. |
| $a_o$ | = 20 in. | $s_t$ | = 8.785 in. |

$e$ = 2 in. (always positive for steel sections)

$\Delta A_s = h_o t_w = 10 \times 0.395 = 3.95$ in.$^2$

$A_{sn} = A_s - \Delta A_s = 16.2 - 3.95 = 12.25$ in.$^2$

$\nu_b = a_o/s_b = 20/4.785 = 4.18$

$\nu_t = a_o/s_t = 20/8.785 = 2.28$

*Check proportioning guidelines (sections 3.7al–3.7bl or Table 4.5 al–bl):* Compression flange (section 3.7al):

$$\frac{b_f}{2t_f} \le \frac{65}{\sqrt{F_y}} \text{ OK—W24×55 is a compact section}$$

Web and limit on $V_m$ (section 3.7a2):

$$\frac{d - 2t_f}{t_w} < \frac{420}{\sqrt{F_y}}$$

OK, since all W shapes meet this requirement

$$\frac{a_o}{h_o} = 2.0 < 3 \text{ OK}$$

$$V_m \le \tfrac{2}{3}\overline{V}_p = \tfrac{2}{3} \times \frac{36 \times 23.57 \times 0.395}{\sqrt{3}} = 129.0 \text{ kips}$$

Opening dimensions (section 3.7bl):

$$\frac{h_o}{d} = \frac{10}{23.57} = 0.42 < 0.7 \text{ OK}$$

$$p_o = \frac{a_o}{h_o} + \frac{6h_o}{d} = 2 + 6 \times 0.42 = 4.52 < 5.6 \text{ OK}$$

Tee dimensions (section 3.7bl):

$$\frac{s_t}{d} > \frac{s_b}{d}; \frac{s_b}{d} = \frac{4.785}{23.57} = 0.20 > 0.15 \text{ OK}$$

$$\nu_t < \nu_b,\ \nu_b = 4.18 < 12 \text{ OK}$$

Buckling of tee-shaped compression zone (section 3.7a3):

$\nu_t = 2.28 < 4$

Check not required

Lateral buckling (section 3.7a4): No requirement, since compression flange is braced throughout its length

*Maximum moment capacity:*

For the unperforated section: $M_p = F_y Z = 36 \times 134 = 4824$ in.-kips

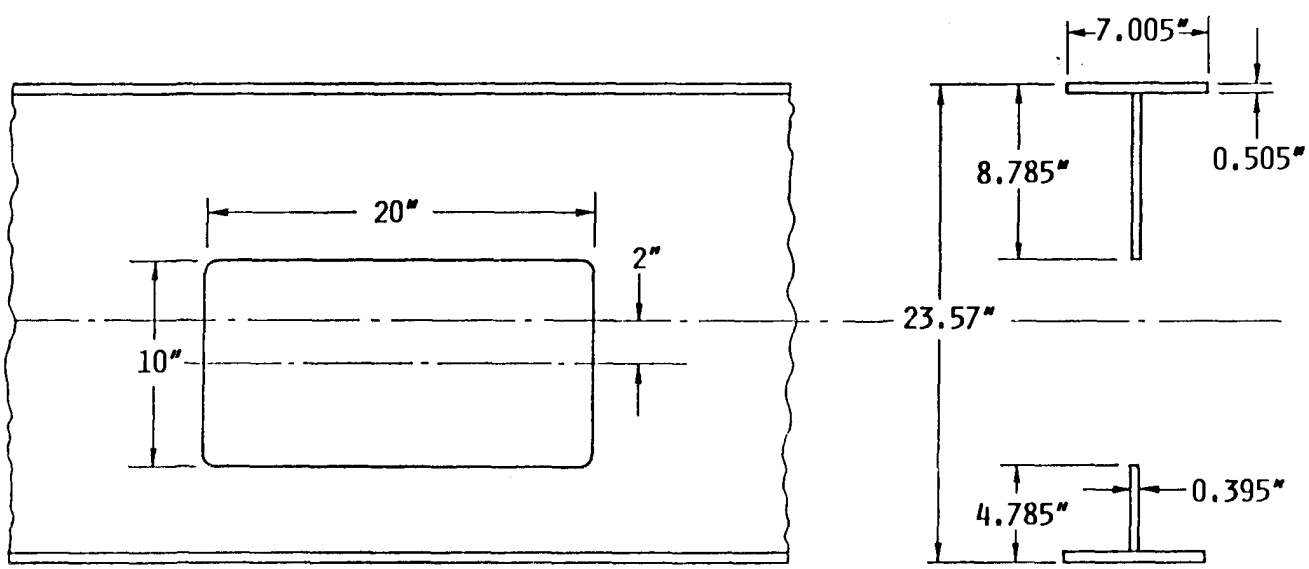


*Fig. 4.1. Details for Example I.*

Using Eq. 3–6,

$$\phi M_m = \phi M_p \left[ 1 - \frac{\Delta A_s \left( \frac{h_o}{4} + e \right)}{Z} \right] = 0.9 \times 4824$$

$$\left[ 1 - \frac{3.95 \left( \frac{10}{4} + 2 \right)}{134} \right] = 3766 \text{ in.-kips}$$

*Maximum shear capacity:*

(a) Bottom tee:

$$V_{pb} = \frac{F_y t_w s_b}{\sqrt{3}} = \frac{36 \times 0.395 \times 4.785}{\sqrt{3}} = 39.28 \text{ kips}$$

From Eq. 3–13 or Fig. A.2 with $\mu = 0$ and $\nu = 4.18$, $\alpha_v = 0.415$.

$V_{mb} = V_{pb}\alpha_v = 39.28 \times 0.415 = 16.27$ kips $\leq V_{pb}$ OK

(b) Top tee:

$$V_{pt} = \frac{F_y t_w s_t}{\sqrt{3}} = \frac{36 \times 0.395 \times 8.785}{\sqrt{3}} = 72.13 \text{ kips}$$

From Eq. 3–13 or Fig. A.2 with $\mu = 0$ and $\nu = 2.28$, $\alpha_v = 0.610$

$V_{mt} = V_{pt}\alpha_v = 72.13 \times 0.610 = 44.04$ kips

(c) Total shear capacity:

$$V_m = V_{mb} + V_{mt}$$
$$= 16.27 + 44.04 = 60.31 \text{ kips} \leq \tfrac{2}{3}\overline{V}_p \text{ OK}$$

$$\phi V_m = 0.90 \times 60.31 = 54.28 \text{ kips}$$

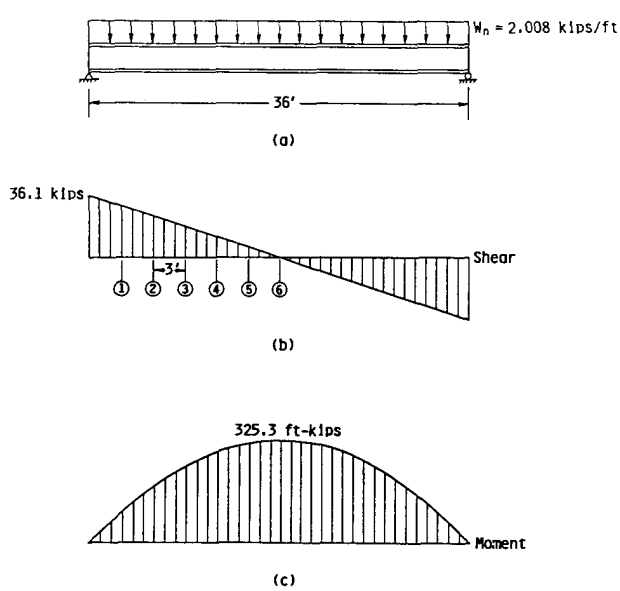


*Fig. 4.2. Shear and moment diagrams for Example 1.*

*Allowable locations of opening:*

The factored moment, $M_u$, factored shear, $V_u$, and values of $V_u/\phi V_m$ and $M_u/\phi M_m$ will be tabulated at 3-ft intervals across the beam.

To determine if the opening can be placed at each location, the $R$ value for each point $(V_u/\phi V_m,\ M_u/\phi M_m)$ is obtained from the interaction diagram, Fig. A.1.

Figure A.1 is duplicated in Fig. 4.3, which shows the location of each point on the interaction diagram. The opening may be placed at a location if $R \leq 1$. The results are presented in Table 4.6. The acceptable range for opening locations is illustrated in Fig. 4.4.

Table 4.6 shows that the centerline of the opening can be placed between the support and a point approximately 14½ ft from the support, on either side of the beam. The opening location is further limited so that the edge of the opening can be no closer than a distance d to the support (section 3.7b3). Thus, the opening centerline must be located at least $d + a_o/2 = 33.6$ in., say 34 in., from the support (section 3.7b2).

*Corner radii:*

The corner radii must be $2t_w = 0.79$ in $\geq$ ⅝ in. Use ⅞ or larger.

## 4.3 EXAMPLE 1A: STEEL BEAM WITH UNREINFORCED OPENING—ASD APPROACH

Repeat Example 1 using the ASD Approach described in section 3.8.

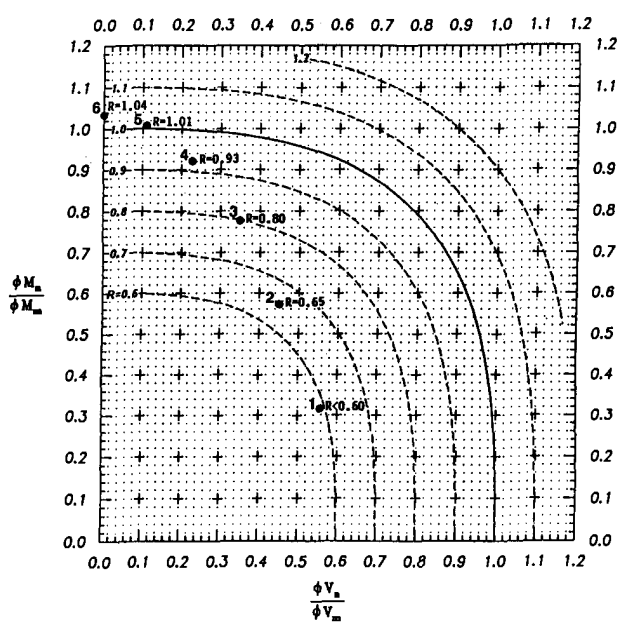


*Fig. 4.3. Moment-shear interaction diagram for Example 1.*

| Table 4.6<br>Allowable Locations for Openings, Example 1 | | | | | | | |
|---|---|---|---|---|---|---|---|
| Point | Distance from Support, ft | $V_u$ kips | $M_u$ in. kips | $\frac{V_u}{\phi V_m}$ | $\frac{M_u}{\phi M_m}$ | $R = \frac{V_u}{\phi V_n} = \frac{M_u}{\phi M_n}$ | |
| 1 | 3 | 30.1 | 1192 | 0.555 | 0.317 | <0.60 | OK |
| 2 | 6 | 24.1 | 2169 | 0.444 | 0.576 | 0.65 | OK |
| 3 | 9 | 18.1 | 2928 | 0.346 | 0.778 | 0.80 | OK |
| 4 | 12 | 12.0 | 3470 | 0.223 | 0.921 | 0.93 | OK |
| 5 | 15 | 6.0 | 3795 | 0.111 | 1.008 | 1.01 | NG |
| 6 | 18 | 0 | 3903 | 0 | 1.036 | 1.04 | NG |

*Loading:*

$$w_u = 1.7 \text{ X } 0.607 + 1.7 \text{ x } 0.8 = 2.392 \text{ kips/ft}$$

The values of factored shear and moment in Example 1 are thus multiplied by the factor 2.392/2.008 = 1.191.

*Section properties, opening and tee properties:*

See Example 1.

*Check proportioning guidelines (section 3.7al-3.7bl or Table 4.5 al-bl):*

See Example 1.

*Maximum moment capacity:*

From Example 1, 0.9 $M_m$ = 3766 in.-kips.
For ASD, $\phi$ = 1.0; $\phi M_m = M_m$ = 4184 in.-kips.

*Maximum shear capacity:*

From Example 1, 0.9 $V_m$ = 54.28 kips. For ASD, $\phi$ = 1.0; $\phi V_m = V_m$ = 60.31 kips.

*Allowable locations of openings:*

As with Example 1, the factored moment $M_u$, factored shear, $V_u$, and values of $V_u/\phi V_m$ and $M_u/\phi M_m$ will be tabulated at 3-ft intervals across the beam.

To determine if the opening can be placed at each location, the $R$ value for each point ($V_u/\phi V_m$, $M_m/\phi M_m$) is obtained from the interaction diagram, Fig. A.1. The opening may be placed at a location if $R \leq 1$. The results are presented in Table 4.7.

Table 4.7 shows that the centerline of the opening can be placed between the support and a point 12 ft from the support, on either side of the beam. This compares to a value of 14.6 ft obtained in Example 1 using the LRFD approach. As in Example 1, the opening location is further limited so that the edge of the opening can be no closer than a distance $d$ = 34 in. to the support (section 3.7b3).

*Corner radii (section 3.7b2):* See Example 1.

## 44 EXAMPLE 2: STEEL BEAM WITH REINFORCED OPENING

A concentric 11x20 in. opening must be placed in a W18x55 section (Fig. 4.5) at a location where the factored shear is 30 kips and the factored moment is 300 ft-kips (3600 in.-kips). The beam is laterally braced throughout its length. $F_y$ = 50 ksi.

Can an unreinforced opening be used? If not, what reinforcement is required?

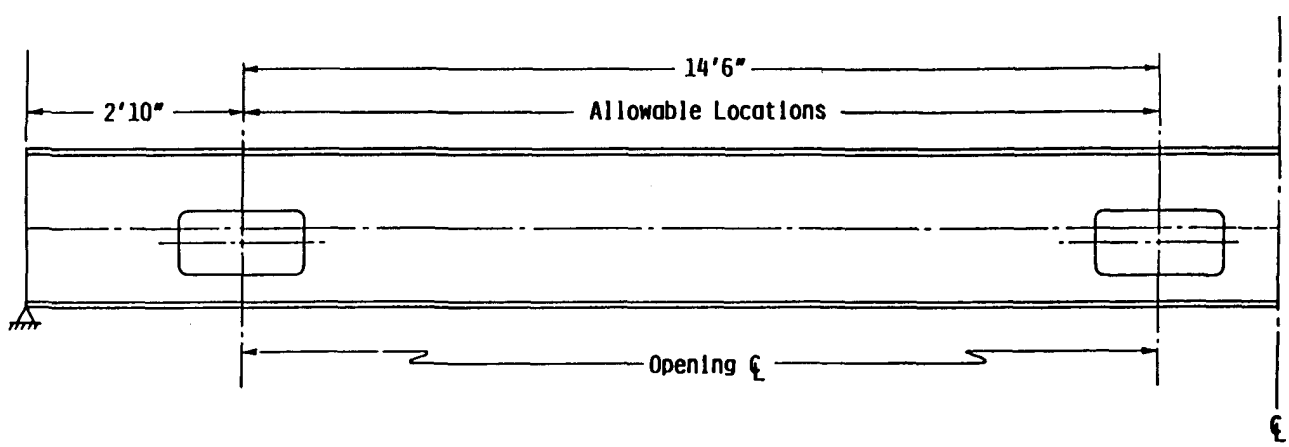


*Fig. 4.4. Allowable opening locations for Example 1.*

| Table 4.7<br>Allowable Locations for Openings, Example 1A ($\phi$ = 1.0) | | | | | | | |
|---|---|---|---|---|---|---|---|
| Point | Distance from Support, ft | $V_u$ kips | $M_u$ in. kips | $\frac{V_u}{\phi V_m}$ | $\frac{M_u}{\phi M_m}$ | $R = \frac{V_u}{\phi V_n} = \frac{M_u}{\phi M_n}$ | |
| 1 | 3 | 35.8 | 1418 | 0.594 | 0.339 | 0.63 | OK |
| 2 | 6 | 28.7 | 2581 | 0.476 | 0.617 | 0.70 | OK |
| 3 | 9 | 22.4 | 3484 | 0.371 | 0.833 | 0.86 | OK |
| 4 | 12 | 14.4 | 4129 | 0.239 | 0.987 | 1.00 | OK |
| 5 | 15 | 7.1 | 4516 | 0.118 | 1.079 | 1.08 | NG |
| 6 | 18 | 0 | 4645 | 0 | 1.110 | 1.11 | NG |

*Section properties:*

$A_s = 16.2$ in.$^2$ $\quad b_f = 7.53$ in.
$d = 18.11$ in. $\quad t_f = 0.63$ in.
$t_w = 0.39$ in. $\quad Z = 112$ in.$^3$

*Opening and tee properties:*

$h_o = 11$ in. $\quad s_b = 3.555$ in.
$a_o = 20$ in. $\quad s_t = 3.555$ in.
$e = 0$

Without reinforcement,

$$\Delta A_s = h_o t_w = 11 \times 0.39 = 4.29 \text{ in.}^2$$

$$A_{sn} = A_s - \Delta A_s = 16.2 - 4.29 = 11.91 \text{ in.}^2$$

$$\nu_b = \nu_t = a_o/s = 20/3.555 = 5.63$$

*Check proportioning guidelines (sections 3.7al-3.7bl or Table 4.5 al-bl):*

Compression flange and reinforcement (section 3.7al):

$$\frac{b}{t} \le \frac{65}{\sqrt{F_y}} = \frac{65}{\sqrt{50}} = 9.2$$

$$\frac{b_f}{2t_f} = 6.0 < 9.2 \text{ OK}$$

(Since a W18x35 is a compact section this check could have been skipped. If reinforcement is needed, the reinforcement must meet this requirement.)

Web and limit on $V_m$ (section 3.7a2):

$$\frac{d - 2t_f}{t_w} < \frac{420}{\sqrt{F_y}} \text{ OK,}$$

since all W shapes meet this requirement

$$\frac{a_o}{h_o} = 1.82 < 3 \text{ OK}$$

$$V_m \le \tfrac{2}{3}\overline{V}_p = \tfrac{2}{3} \times \frac{50 \times 18.11 \times 0.39}{\sqrt{3}} = 135.9 \text{ kips}$$

Opening dimensions (section 3.7bl):

$$\frac{h_o}{d} = \frac{11}{18.11} = 0.61 < 0.7 \text{ OK}$$

$$p_o = \frac{a_o}{h_o} + \frac{6h_o}{d} = 1.82 + 6 \times 0.61 = 5.48 < 5.6 \text{ OK}$$

*Tee dimensions (section 3.7bl):*

$$\frac{s_b}{d} = \frac{s_t}{d} = \frac{3.555}{18.11} = 0.196 > 0.15 \text{ OK}$$

$$\nu_b = \nu_t = 5.63 < 12 \text{ OK}$$

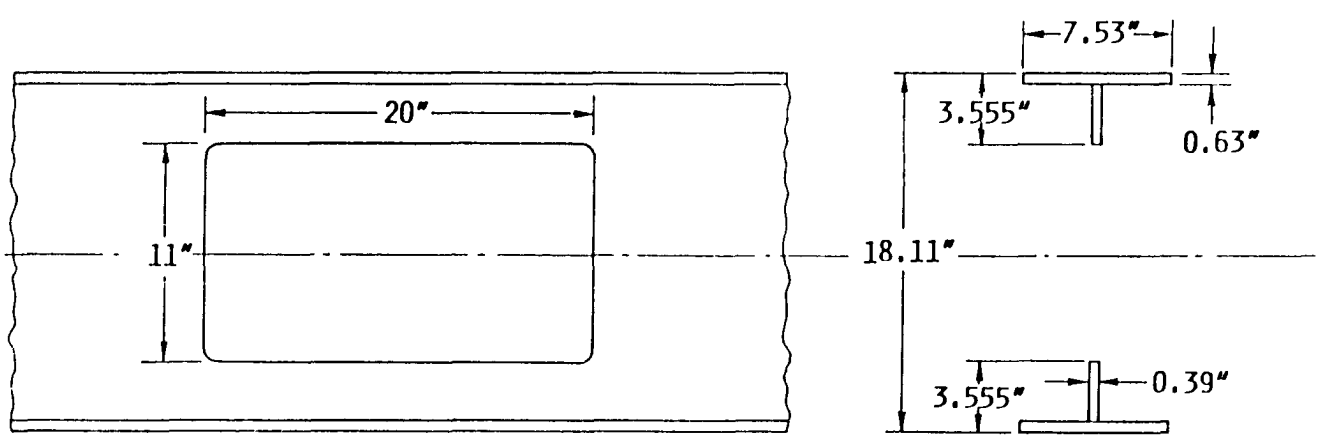


*Fig. 4.5. Details for Example 2.*

Buckling of tee-shaped compression zone (section 3.7a3): $\nu = 5.63 > 4$. Check for buckling if reinforcement is not used.

Lateral buckling (section 3.7a4): No requirement, since compression flange is braced throughout its length.

*Maximum moment capacity:*

For the unperforated section: $M_p = F_y Z = 50 \times 112 = 5600$ in.-kips

Using Eq. 3-6,

$$\phi M_m = \phi M_p \left[ 1 - \frac{\Delta A_s \left( \frac{h_o}{4} + e \right)}{Z} \right] = 0.9 \times 5600$$

$$\left[ 1 - \frac{4.29 \left( \frac{11}{4} + 0 \right)}{112} \right] = 4509 \text{ in.-kips}$$

*Maximum shear capacity:*

Bottom and top tees:

$$V_{pb} = V_{pt} = V_p \frac{F_y t_w s}{\sqrt{3}} = \frac{50 \times 0.39 \times 3.555}{\sqrt{3}} = 40.0 \text{ kips}$$

Using Eq. 3–13 or Fig. A.2 with $\mu = 0$ and $\nu = 5.63$, $\alpha_v v = 0.333$.

$V_{mb} = V_{mt} = V_p \alpha_v = 40.0 \times 0.333 = 13.32$ kips

Total capacity

$$\phi V_m = \phi(V_{mb} + V_{mt}) = 0.90 \times 26.64 = 23.98 \text{ kips}$$

*Check interaction:*

$$\frac{V_u}{\phi V_m} = \frac{30}{23.98} = 1.251 \qquad \frac{M_u}{\phi M_m} = \frac{3600}{4509} = 0.798$$

By inspection, $R > 1.0$. The strength is not adequate and reinforcement is required.

*Design reinforcement and check strength:*

Reinforcement should be selected to reduce $R$ to 1.0. Since the reinforcement will increase $M_m$ of a steel member only slightly, the increase in strength will be obtained primarily through the effect of the reinforcement on the shear capacity, $V_m$. If $M_u/\phi M_m$ remains at approximately 0.79, $R = 1.0$ will occur for $V_u/\phi V_m = 0.80$ (point 1 on Fig. 4.6).

Try $A_r = 0.65$ in.$^2$

$$\Delta A_s = h_o t_w - 2A_r = 11 \times 0.39 - 2 \times 0.65 = 2.99 \text{ in.}^2$$

*Check strength:*

(a) Maximum moment capacity:

Since $e = 0$, $t_w e < A_r$. Use Eq. 3–7.

$$\phi M_m = \phi M_p \left[ 1 - \frac{t_w \left( \frac{h_o^2}{4} + h_o e - e^2 \right) - A_r h_o}{Z} \right] \le \phi M_p$$

$$\phi M_m =$$

$$0.90 \times 5600 \left[ 1 - \frac{0.39 \left( \frac{11^2}{4} \right) - 0.65 \times 11}{112} \right] \le 0.9 \times 5600$$

$\phi M_m = 4831$ in.-kips $\le 5040$ in.-kips OK

(b) Maximum shear capacity:

$$V_{pb} = V_{pt} = 40.0 \text{ kips}$$

$$\bar{s} = s - \frac{A_r}{2b_f} = 3.555 - \frac{0.65}{2 \times 7.53} = 3.51 \text{ in.}$$

$$\nu = \frac{a_o}{\bar{s}} = \frac{20}{3.51} = 5.70$$

Assume $d_r = 3.555 - 3/16 = 3.368$ in.

$$P_r = F_y A_r \le \frac{F_y t_w a_o}{2\sqrt{3}}$$

$$= 50 \times 0.65 \le 113 \text{ kips}$$

$$= 32.5 \text{ kips} \le 113 \text{ kips OK}$$

Using Eq. 3–14,

$$\mu = \frac{2P_r d_r}{V_p s} = \frac{2 \times 32.5 \times 3.368}{40.0 \times 3.555} = 1.54$$

Using Eq. 3–13 or Fig. A.2 with $\mu = 1.54$ and $\nu = 5.70$, $\alpha_v = 0.537$.

$$V_{mb} = V_{mt} = V_p \alpha_v = 40.0 \times 0.537 = 21.5 \text{ kips}$$

$$V_m = V_{mb} + V_{mt} = 43.0 \text{ kips} \le \tfrac{2}{3} V_p \text{ OK}$$

$$\phi V_m = 0.90 \times 43 = 38.7 \text{ kips}$$

(c) Check interaction:

$$\frac{V_u}{\phi V_m} = \frac{30}{38.7} = 0.775 \qquad \frac{M_u}{\phi M_m} = \frac{3600}{4831} = 0.745$$

From Fig. A.1 (Fig. 4.6, point 2), $R = 0.96 \le 1.0$ OK The section has about 4 percent excess capacity.

*Select reinforcement:*

Check to see if reinforcement may be placed on one side of web (Eqs. 3-33 through 3-36):

$$A_r \le \frac{A_f}{3} \quad ? \qquad \frac{a_o}{h_o} \le 2.5 \ ?$$

$$0.652 \le \frac{7.53 \times 0.630}{3} \quad ? \qquad 1.82 \le 2.5 \text{ OK}$$

$$0.652 \le 1.58 \text{ OK}$$

$$\frac{s}{t_w} \le \frac{140}{\sqrt{F_y}} \quad ? \qquad \frac{M_u}{V_u d} \le 20 \ ?$$

$$\frac{3.555}{0.39} \le \frac{140}{\sqrt{50}} \quad ? \qquad \frac{3600}{30 \times 18.11} \le 20 \ ?$$

$$9.1 \le 19.8 \text{ OK} \qquad 6.62 \le 20 \text{ OK}$$

Therefore, reinforcement may be placed on one side of the web.

From the stability check [Eq. (3-22)], $b/t \le 9.2$. Use ⅜×1¾ in. bar $- b/t = 4.67$

$A_r = 0.656 > 0.65$ assumed OK
$d_r = 3.555 - 3/16 = 3.368$ as assumed

*Comer radii (section 3.7b2) and weld design:*

The corner radii must be $2t_w = 0.78$ in. $\ge$ ⅝ in. Use ⅞ in. or larger.

The weld must develop $R_{wr} = \phi 2P_r = 0.90 \times 2 \times 32.8 = 59.0$ kips within the length of the opening and $R_{wr} = \phi F_y A_r = 0.90 \times 50 \times 0.656 = 29.5$ kips within each extension. Use extensions of $\ell_1 \ge a_o/4 = 20/4 = 5$ in., $\ge \sqrt{3}A_r/(2t_w) = \sqrt{3} \times 0.656/(2 \times 0.39) = 1.46$ in. Use 5 in. The total length of the reinforcement = 20.0 + 2 × 5.0 = 30.0 in.

Assume E70XX electrodes, which provide a shear strength of the weld metal $F_w = 0.60 \times 70 = 42$ ksi (AISC 1986a). A fillet weld will be used on one side of the reinforcement bar, within the length of the opening. Each 1/16 in. weld will provide a shear capacity of $\phi F_w a_o \times 0.707 \times 1/16 = 0.75 \times 42 \times 20 \times 0.707 \times 1/16 = 27.8$ kips.

For $R_{wr} = 59.0$ kips, with the reinforcement on one side of the web, 59.0/27.8 = 2.12 sixteenths are required. Use a 3/16 in. fillet weld. [Note the minimum size of fillet weld for this material is 3/16 in.]. Welds should be used on both sides of the bar in the extensions. By inspection, the weld size is identical.

According to AISC (1986b), the shear rupture strength of the base metal must also be checked. The shear rupture strength = $\phi F_{wr} A_{ns}$, in which $\phi = 0.75$, $F_n = 0.6F_u$, $F_u$ = tensile strength of base metal, and $A_{ns}$ = net area subject to shear. This requirement is effectively covered for the steel section by the limitation that $P_r \le F_y t_w a_o/(2\sqrt{3})$ which is based on $\phi = 0.90$ instead of $\phi = 0.75$, but uses $F_y/\sqrt{3} = 0.58F_y$ in place of $0.6F_u$. For the reinforcement, the shear rupture force $= \phi 2P_r(1¾ - 3/16)/1¾ = 52.7$ kips. $\phi F_n A_{ns} =$ 0.75 x 0.6 x 58 ksi x 3/8 in. x 120 in. =196 kips ≥ 52.7, OK. Rev. 3/1/03

The completed design is illustrated in Fig. 4.7.

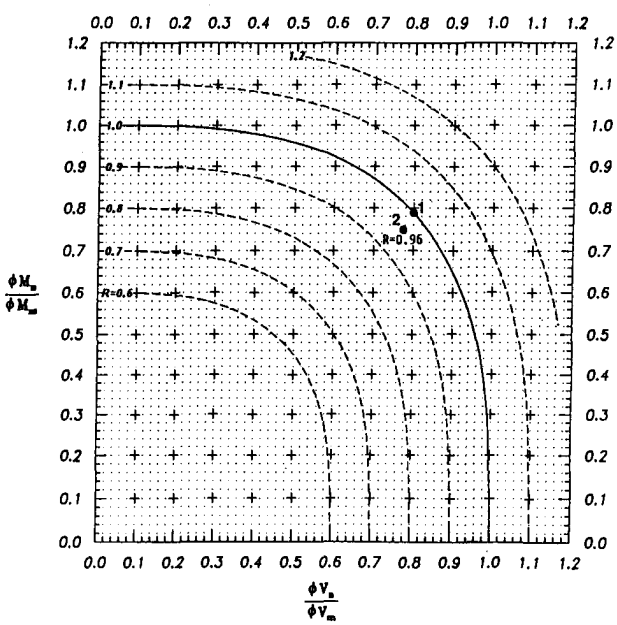


*Fig. 4.6. Moment-shear interaction diagram for Example 2.*

## 4.5 EXAMPLE 3: COMPOSITE BEAM WITH UNREINFORCED OPENING

Simply supported composite beams form the floor system of an office building. The 36-ft beams are spaced 8 ft apart and support uniform loads of $w_d = 0.608$ kips/ft and $w_l = 0.800$ kips/ft. The slab has a total thickness of 4 in. and will be placed on metal decking. The decking has 2 in. ribs on 12 in. centers transverse to the steel beam. An A36 W21×44 steel section and normal weight concrete will be used. Normal weight concrete ($w$ = 145 lbs/ft$^3$) with $f'_c$ = 3 ksi will be used.

Can an unreinforced 11×22 in. opening be placed at the quarter point of the span? See Fig. 4.8.

*Loading:*

$$w_u = 1.2 \times 0.608 + 1.6 \times 0.800 = 2.01 \text{ kips/ft}$$

At the quarter point:

$$V_u = \frac{w_u L}{4} = \frac{2.01 \times 36}{4} = 18.1 \text{ kips}$$

$$M_u = \frac{3w_uL^2}{32} = \frac{3 \times 2.01 \times 36^2}{32} = 2.44.2 \text{ ft-kips}$$

*Section properties:*

$A_s = 13.0$ in.$^2$ $\qquad b_f = 6.50$ in.

$d = 20.66$ in. $\qquad t_f = 0.45$ in.

$t_w = 0.35$ in.

$t_s = 4.0$ in.

$t_e = t_s' = 2.0$ in.

$$b_e \leq \frac{\text{span}}{4} = \frac{36 \times 12}{4} = 108 \text{ in.}$$

$b_e \leq$ beam spacing $= 8 \times 12 = 96$ in. CONTROLS

*Opening and tee properties:*

$h_o = 11$ in. $\qquad s_b = 4.83$ in.

$a_o = 22$ in. $\qquad s_t = 4.83$ in.

$e = 0$ (positive upward for composite members)

$\Delta A_s = h_o t_w = 11 \times 0.35 = 3.85$ in.$^2$

$A_{sn} = A_s - \Delta A_s = 13.0 - 3.85 = 9.15$ in.$^2$

$\nu_b = \nu_t = 22/4.83 = 4.55$

*Shear connector parameters:*

Use ¾×3½ in. studs (Note: maximum allowable stud height is used to obtain the maximum stud capacity). Following the procedures in AISC (1986b),

$$E_c = w^{1.5}\sqrt{f_c'} = 145^{1.5}\sqrt{3} = 3024 \text{ ksi}$$

$$Q_n = 0.5\, A_{sc}\sqrt{f_c' E_c} = 0.5 \times 0.44\sqrt{3 \times 3024} = 21.0 \text{ kips}$$

Try 1 stud per rib:

$$\frac{0.85}{\sqrt{N_r}}\left(\frac{w_r}{h_r}\right)\left(\frac{H_s}{h_r} - 1.0\right) \leq 1.0$$

$$= \frac{0.85}{\sqrt{1}}\left(\frac{6}{2}\right)\left(\frac{3.5}{2} - 1\right) = 1.91, \text{ use } 1.0$$

*Check proportioning guidelines (sections 3.7al, 3.7a2, and 3.7bl or Table 4.5 a1-a3):*

Compression flange (section 3.7a1):

$$\frac{b_f}{2t_f} \leq \frac{65}{\sqrt{F_y}} \text{ OK} - \text{W21×44 is a compact section.}$$

Web and limit on $V_m$ (section 3.7a2):

$$\frac{d - 2t_f}{t_w} < \frac{420}{\sqrt{F_y}}$$

OK, since all W shapes meet this requirement

$$\frac{a_o}{h_o} = 2 < 3 \text{ OK}$$

$$V_m \leq \tfrac{2}{3}\overline{V}_p + \overline{V}_c$$

$$\leq \tfrac{2}{3} \times \frac{36 \times 20.66 \times 0.395}{\sqrt{3}} + \overline{V}_c = 100.2 \text{ kips} + \overline{V}_c$$

Opening dimensions (section 3.7b1):

$$\frac{h_o}{d} = \frac{11}{20.66} = 0.53 < 0.7 \text{ OK}$$

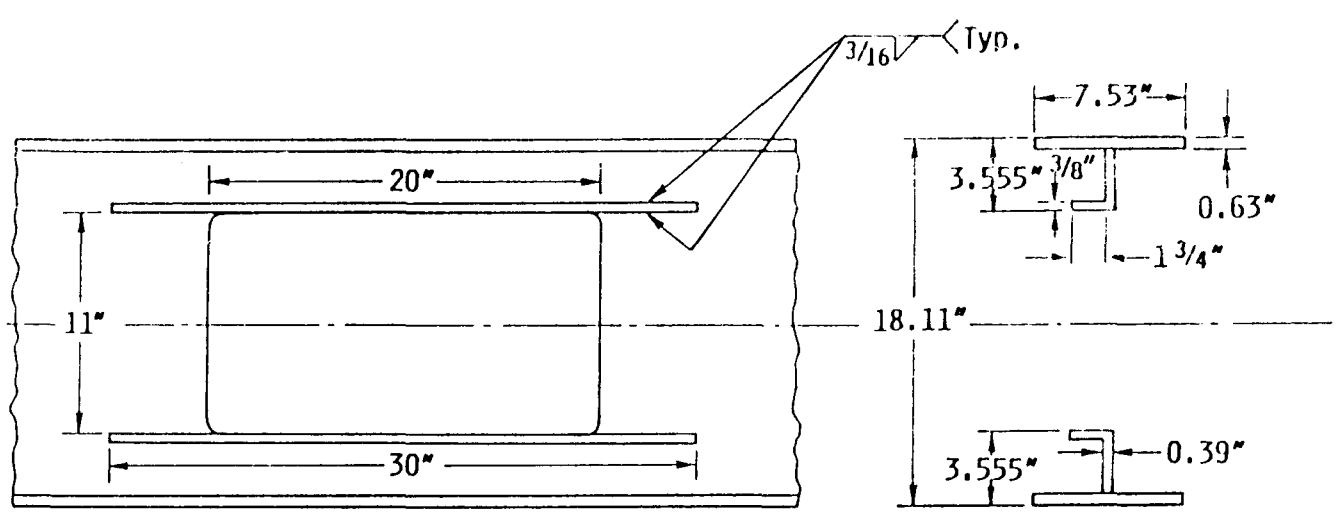


*Fig. 4.7. Completed design of reinforced opening for Example 2.*

$$p_o = \frac{a_o}{h_o} + \frac{6h_o}{d} = 2 + 6 \times 0.53 = 5.18 < 6 \text{ OK}$$

Tee dimension (section 3.7bl):

$$\frac{s_b}{d} = \frac{s_t}{d} = 0.234 > 0.15 \text{ OK}$$

$$\nu_b = \nu_t = 4.55 < 12 \text{ OK}$$

*Maximum moment capacity:*

Use Eqs. 3-11a, 3-11b, and 3-11c to calculate the force in the concrete:

$P_c \leq 0.85 f'_c b_e t_e = 0.85 \times 3 \times 96 \times 2 = 489$ kips

$P_c \leq NQ_n = 9 \times 21.0 = 189$ kips CONTROLS

$P_c \leq F_y A_{sn} = 36 \times 9.15 = 329$ kips

By inspection, the PNA in the unperforated section will be below the top of the flange. Therefore, use Eq. 3-10 to calculate $M_m$. First, check that $P_c \geq P_{c\,min}$.

$P_{c\,min} = F_y(\frac{3}{4} t_w d - \Delta A_s) = 36\,(\frac{3}{4} \times 0.35 \times 20.66 - 3.85) = 56.6 < P_c$ OK

$$\bar{a} = \frac{P_c}{0.85 f'_c b_e} = \frac{189}{0.85 \times 3 \times 96} = 0.772 \text{ in.}$$

$$\phi M_m = \phi \left[ F_y A_{sn} \frac{d}{2} + F_y \Delta A_s e + P_c \left( t_s - \frac{\bar{a}}{2} \right) \right]$$

$$= 0.85 \left[ 329 \times \frac{20.66}{2} + 0 + 189 \left( 4 - \frac{0.772}{2} \right) \right] = 3469 \text{ in.-kips}$$

*Maximum shear capacity:*

$$V_{pb} = V_{pt} = \frac{F_y t_w s}{\sqrt{3}} = \frac{36 \times 0.35 \times 4.83}{\sqrt{3}} = 35.1 \text{ kips}$$

(a) Bottom tee:
Using Eq. 3-13 or Fig. A.2 with $\mu = 0$ and $\nu = 4.55$, $\alpha_v = 0.39$

$V_{mb} = V_{pb} \alpha_v = 35.1 \times 0.39 = 13.7$ kips

(b) Top Tee:
The value of $\mu$ must be calculated for the top tee. The net area of steel in the top tee is

$$A_{st} = \frac{A_{sn}}{2} = \frac{9.15}{2} = 4.58 \text{ in.}^2$$

The force in the concrete at the high moment end of the opening is obtained using Eqs. 3-15a, b and c.

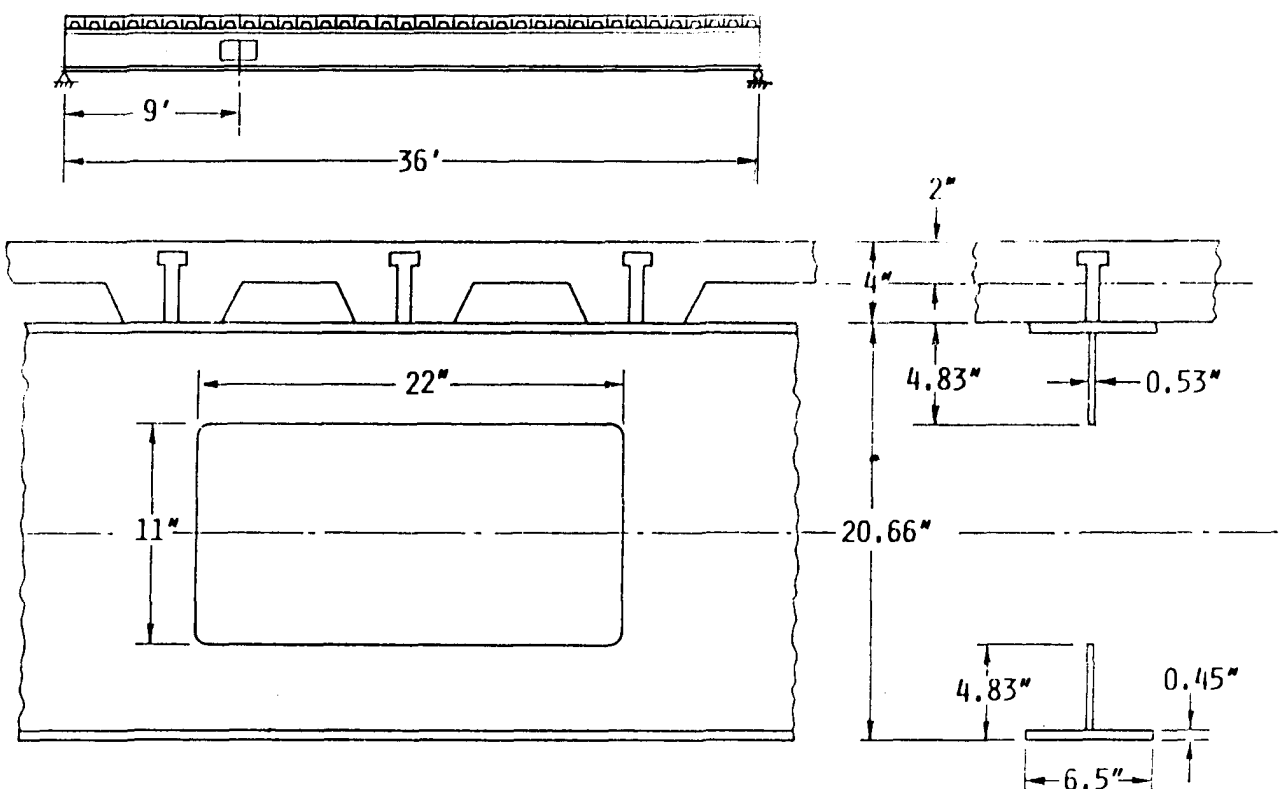


*Fig. 4.8. Details for Example 3.*

$P_{ch} \leq 0.85 f'_c b_e t_e = 489$ kips

$P_{ch} \leq NQ_n = 189$ kips

$P_{ch} \leq F_y A_{st} = 36 \times 4.58 = 164.7$ kips CONTROLS

The force in the concrete at the low moment end of the opening is obtained using Eq. 3-16. Assume minimum number of ribs = one rib over the opening. (Note: It is possible to locate two ribs over the opening, but for now use the conservative assumption.)

$$P_{cl} = P_{ch} - N_o Q_n \geq 0$$

$$= 164.7 - 1 \times 21.3 = 143.4 \text{ kips}$$

Calculate $d_h$ and $d_l$ using Eqs. 3–17 and 3–18b, respectively.

$$d_h = t_s - \frac{P_{ch}}{1.7 f'_c b_e} = 4.0 - \frac{164.7}{1.7 \times 3 \times 96} = 3.66 \text{ in.}$$

$$d_l = t_s - t'_s + \frac{P_{cl}}{1.7 f'_c b_e} = 4.0 - 2.0 + \frac{143.4}{1.7 \times 3 \times 96} = 2.29 \text{ in.}$$

$P_{ch}$, $P_{cl}$ and their points of application are illustrated in Fig. 4.9.

Calculate $\mu$ using Eq. 3–14.

$$\mu = \frac{2P_r d_r + P_{ch} d_h - P_{cl} d_l}{V_p s_t} =$$

$$\frac{0 + 164.7 \times 3.66 - 143.4 \times 2.29}{35.1 \times 4.83} = 1.62$$

Using Eq. 3–13 or Fig. A.2 with $\mu = 1.62$ and $\nu = 4.55$, $\alpha_v = 0.648$.

$$V_{mt} = V_{pt} \alpha_v = 35.1 \times 0.648 = 22.7 \text{ kips}$$

Since $\alpha_v < 1$ ($V_{mt} < V_{pt}$), no additional checks are necessary (see Eqs. 3–19 and 3–21).

(c) Total shear capacity:

$$V_m = V_{mb} + V_{mt} = 13.7 + 22.7 = 36.4 \text{ kips} \leq \tfrac{2}{3}\overline{V}_p + \overline{V}_c \quad \text{OK}$$

$$\phi V_m = 0.85 \times 36.4 = 30.94 \text{ kips}$$

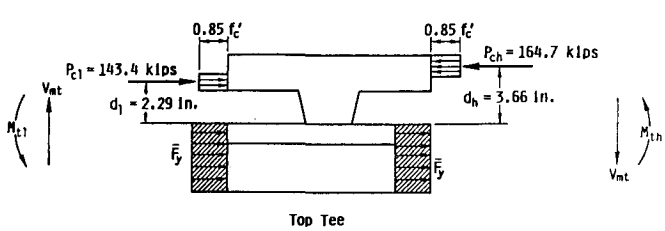


*Fig. 4.9. Top tee under maximum shear for Example 3.*

*Check interaction:*

$$\frac{V_u}{\phi V_m} = \frac{18.1}{30.94} = 0.585 \qquad \frac{M_u}{\phi M_m} = \frac{2931}{3469} = 0.845$$

Using Fig. A.1 (reproduced in Fig. 4.10) the point (0.585, 0.845) yields a value of $R = 0.93$. Therefore, the opening can be placed at the quarter point of the span.

The design shear and moment capacities at the opening are

$$\phi V_n = \frac{V_u}{R} = \frac{18.1}{0.93} = 19.46 \text{ kips}$$

$$\phi M_n = \frac{M_u}{R} = \frac{2931}{0.93} = 3152 \text{ in.-kips} = 263 \text{ ft-kips}$$

## 4.6 EXAMPLE 4: COMPOSITE GIRDER WITH UNREINFORCED AND REINFORCED OPENINGS

A 40-foot simply-supported composite girder supports factored loads of 45 kips at its third points [Fig. 4.11(a)]. The slab has a total thickness of 5½ in. and is cast on metal decking with 3 in. deep ribs that are parallel to the A36 W18X60 steel beam. The ribs are spaced at 12 in., and the girders are spaced 40 ft apart. The concrete is normal weight; $f'_c$ = 4 ksi. The design calls for pairs of ¾ ×5 in. shear studs spaced every foot in the outer third of the girder, starting 6 in. from the support, and single studs every foot in the middle third of the girder. The design moment capacity of the unperforated member, $\phi M_n = \phi M_{pc} = 621$ ft-kips in the middle third of the member.

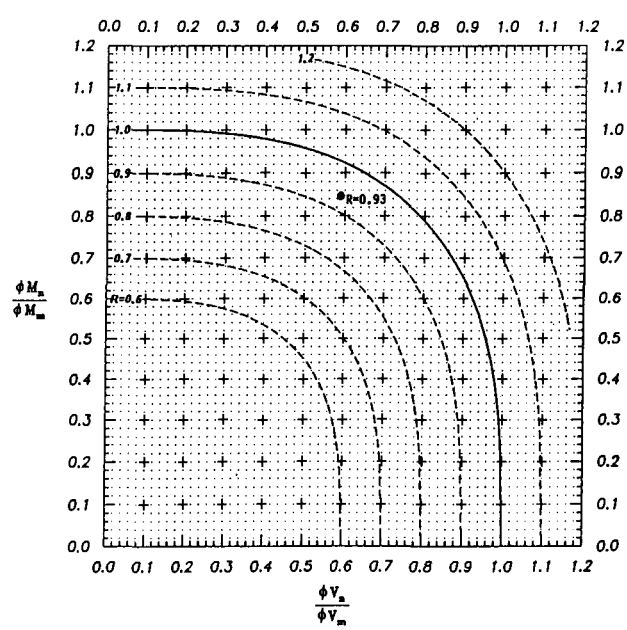


*Fig. 4.10. Moment-shear interaction diagram for Example 3.*

1. Can an unreinforced 10x24 in. opening with a downward eccentricity of 1 in. [Fig. 4.12(a)] be placed in the middle third of the beam? If not, how much reinforcement is necessary?
2. Can a concentric unreinforced opening of the same size [Fig. 4.12(b)] be placed 6½ ft from the centerline of the support? If not, how much reinforcement is required?

*Loading:*

The factored shear and moment diagrams are shown in Figs 4.11 (b) and (c).

*Section properties:*

$A_s = 17.6 \text{ in.}^2$ $\qquad b_f = 7.555 \text{ in.}$

$d = 18.24 \text{ in.}$ $\qquad t_f = 0.695 \text{ in.}$

$t_w = 0.415 \text{ in.}$

$t_s = 5.5 \text{ in.}$ $\qquad t_s' = 2.5 \text{ in.}$

$$t_e = \frac{t_s + t_s'}{2} = \frac{5.5 + 2.5}{2} = 4.0 \text{ in.}$$

$$b_e \le \frac{\text{span}}{4} = \frac{40 \times 12}{4} = 120 \text{ in. CONTROLS}$$

$$b_e \le \text{beam spacing} = 40 \times 12 = 480 \text{ in.}$$

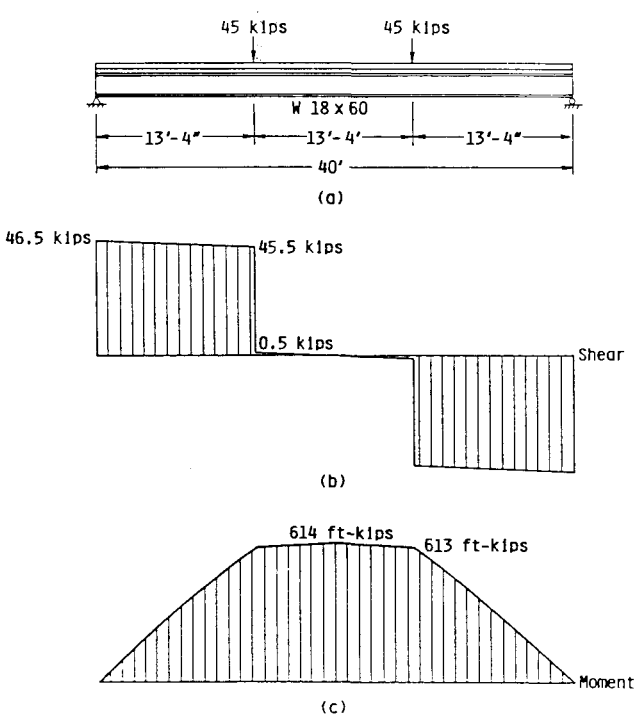


*Fig. 4.11. Shear and moment diagrams for Example 4.*

*Opening and tee properties:*

$h_o = 10 \text{ in.}$ $\qquad s_b = 3.12$ in. middle third of beam

$a_o = 24 \text{ in.}$ $\qquad = 4.12$ in 6½ ft from support

$e = -1.0$ in. middle third of beam $\qquad s_t = 5.12$ in. middle third of beam

$= 0$ 6½ ft from support $\qquad = 4.12$ in. 6½ ft from support

Without reinforcement,

$$\Delta A_s = h_o t_w = 10 \times 0.415 = 4.15 \text{ in.}^2$$

$$A_{sn} = A_s - \Delta A_s = 17.6 - 4.15 = 13.45 \text{ in.}^2$$

$$v_t = \frac{a_o}{s} = \frac{24}{5.12} = 4.69 \text{ middle third of beam}$$

$$v_b = v_t = \frac{a_o}{s} = \frac{24}{4.12} = 5.83 \quad 6\tfrac{1}{2} \text{ ft from support}$$

*Shear connector strength:*

$$E_c = w^{1.5}\sqrt{f_c'} = 145^{1.5}\sqrt{4} = 3492 \text{ ksi}$$

$$Q_n = 0.5\, A_{sc}\sqrt{f_c' E_c} = 0.5 \times 0.44\sqrt{4 \times 3492} = 26.0 \text{ kips}$$

*Check proportioning guidelines (sections 3.7al, 3.7a2, and 3.7a3 or Table 4.5 a1-a3):*

Compression flange and reinforcement (section 3.7a1):

$$\frac{b}{t} \le \frac{65}{\sqrt{36}} = 10.83$$

$$\frac{b_f}{2t_f} \le 10.83 \quad \text{OK—W18×60 is a compact section}$$

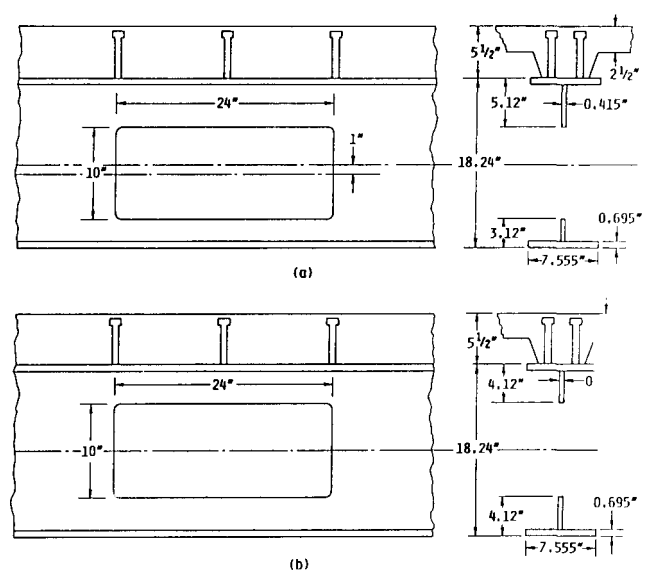


*Fig. 4.12. Details for Example 4. (a) Eccentric opening, (b) concentric opening.*

Web and limits on $V_m$ (section 3.7a2):

$$\frac{d - 2t_f}{t_w} < \frac{420}{\sqrt{F_y}} \text{ OK,}$$

since all W shapes meet this requirement

$$\frac{a_o}{h_o} = 2.5 < 3 \text{ OK}$$

$$V_m \leq \tfrac{2}{3}\overline{V}_p + \overline{V}_c$$

$$\leq \tfrac{2}{3} \times \frac{36 \times 18.24 \times 0.415}{\sqrt{3}} + \overline{V}_c = 104.9 \text{ kips} + \overline{V}_c$$

Opening dimensions (section 3.7bl):

$$\frac{h_o}{d} = \frac{10}{18.24} = 0.55 < 0.7 \text{ OK}$$

$$p_o = \frac{a_o}{h_o} + \frac{6h_o}{d} = 2.4 + 6 \times 0.55 = 5.70 < 6 \text{ OK}$$

Tee dimensions (section 3.7b1):

$$\frac{s_t}{d} > \frac{s_b}{d}; \frac{s_b}{d} = \frac{3.12}{18.24} = 0.17 > 0.15 \text{ and } 0.12 \text{ OK}$$

in middle third OK, by inspection, 6½ ft from support

$$v_{max} = v_b \text{ in middle third} = 7.69 < 12 \text{ OK}$$

**1. Opening in middle one-third of beam**

Figure 4.11(b) shows that the shear is very low and the moment is very nearly constant in the middle third of the girder. The maximum factored moment is 614 ft-kips (7368 in-kips), which is very close to $\phi M_{pc}$ = 621 ft-kips (7452 in.-kips) for unperforated section. Reinforcement will be required to compensate for the opening. Since the section is in nearly pure bending, the reinforcement will be selected based on bending alone, i.e., $M_n = M_m$.

The PNA in the unperforated section is above the top of the flange. Therefore, Eq. 3-9 can be used to calculate the required area of reinforcement. (It should be very close to the area removed by the opening.)

$$\frac{M_m}{M_{pc}} = \frac{A_{sn}}{A_s} + \frac{F_y \Delta A_s e}{M_{pc}}$$

Setting

$$\frac{M_m}{M_{pc}} = \frac{\phi M_m}{\phi M_{pc}}; \phi M_m = M_u; A_{sn} = A_s - h_o t_w + 2A_s;$$

$\Delta A_s = h_o t_w - 2A_r$; substituting and solving for $2A_r$ gives an expression for the total area of reinforcement needed to provide the required bending strength.

$$2A_r = h_o t_w - \frac{\phi M_{pc} - M_u}{\dfrac{\phi M_{pc}}{A_s} - F_y e} = 10 \times 0.415 -$$

$$\frac{7452 - 7368}{\dfrac{7452}{17.6} - 36 \times (-1)} = 3.93 \text{ in.}^2$$

In this case, $2A_r = h_o t_w$ would have been an excellent solution. Use $2A_r$ = 4.0 in.$^2$; $A_r$ = 2.0 in.$^2$

Since $2A_r \leq h_o t_o$, $M_m \leq M_{pc}$ OK

$$P_r = F_y A_r \leq \frac{F_y t_w a_o}{2\sqrt{3}}$$

$$= 36 \times 2 \leq \frac{36 \times 0.415 \times 24}{2\sqrt{3}}$$

$$= 72 \text{ kips} \leq 103.5 \text{ kips OK}$$

A check of Eqs. 3-33 through 3-36 shows that the reinforcement must be placed on both sides of the web. To prevent local buckling, $b/t \leq 10.83$. Use ⅜×2¾ in. bars on each side of the web, above and below the opening. Extend the bars $\ell = a_o/4$ = 6 in. on either side of the opening for a total length of 36 in. Design the welds in accordance with Eqs. 3-31 and 3-32 (see Example 2).

The completed design is illustrated in Fig. 4.13.

**2. Opening 6½ ft from support**

The eccentricity is zero at this location [Fig. 4.12(b)]. $V_u$ = 46.0 kips and $M_u$ = 300 ft-kips (3600 in-kips) (Fig. 4.11).

*Maximum moment capacity without reinforcement:*

The PNA is below the top of the flange in the unperforated section. Therefore, Eq. 3-10 will be used to calculate $M_m$. The force in the concrete is obtained using Eqs. 3-11 a, b, and c.

$$P_c \leq 0.85 f'_c b_e t_e = 0.85 \times 4 \times 120 \times 4 = 1632.0 \text{ kips}$$

$$P_c \leq NQ_n = 14 \times 26.0 = 364.0 \text{ kips CONTROLS}$$

$$P_c \leq F_y A_{sn} = 36 \times 13.45 = 484.2 \text{ kips}$$

Check $P_{c\,min} = F_y(\tfrac{3}{4} t_w d - \Delta A_s)$

$$= 36\ (\tfrac{3}{4} \times 0.415 \times 18.24 - 4.15) = 55.0 < P_c \text{ OK}$$

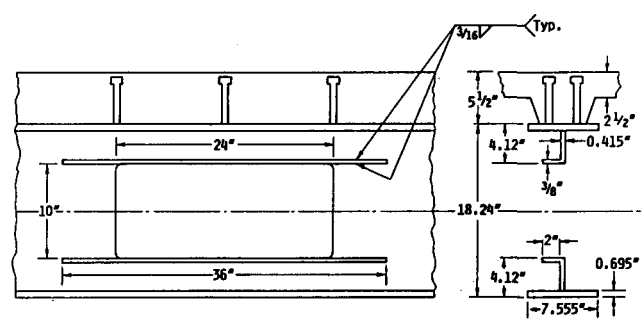


*Fig. 4.13. Completed design of reinforced, eccentric opening located in middle one-third of beam in Example 4.*

$$\bar{a} = \frac{P_c}{0.85 f'_c b_e} = \frac{364.0}{0.85 \times 4 \times 120} = 0.892 \text{ in.}$$

Using Eq. 3-10,

$$\phi M_m = \phi \left[ F_y A_{sn} \frac{d}{2} + F_y \Delta A_s e + P_c \left( t_s - \frac{\bar{a}}{2} \right) \right]$$

$$= 0.85 \left[ 484.2 \times \frac{18.24}{2} + 0 + 364.0 \left( 5.5 - \frac{0.892}{2} \right) \right]$$

$$= 5318 \text{ in.-kips}$$

*Maximum shear capacity without reinforcement:*

$$V_{pb} = V_{pt} = \frac{F_y t_w s}{\sqrt{3}} = \frac{36 \times 0.415 \times 4.12}{\sqrt{3}} = 35.5 \text{ kips}$$

(a) Bottom tee:
Using Eq. 3-13 or Fig. A.2 with $\mu = 0$ and $\nu = 5.83$, $\alpha_v = 0.324$.

$$V_{mb} = V_{pb} \alpha_v = 35.5 \times 0.324 = 11.5 \text{ kips}$$

(b) Top tee:
The value of $\mu$ [Eq. 3-14] must be calculated for the top tee.

The force at the high moment end of the opening, $P_{ch}$, is obtained using Eqs. 3-15a, b, and c. Noting that Eqs. 3-15a and b are the same as Eqs. 3-1 1a and b, the limitations based on concrete and stud capacity are identical to those obtained for $P_c$ in the calculation of $M_m$ above. This leaves Eq. 3-15c.

$$P_{ch} \le F_y A_{st} = 36 \times \frac{13.45}{2} = 242 \text{ kips CONTROLS}$$

The force in the concrete at the low moment end of the opening, $P_{cl}$, is obtained using Eq. 3-16. With the shear studs placed in pairs every foot, starting 6 in. from the centerline of the support, $N_o = 2$. Note that the definitions for $N$ and $N_0$ require the studs to be completely within the applicable range to be counted. This means that the studs located just at the ends of the opening are not included in $N_o$, and the studs at the high moment end of the opening are not counted in $N$.

$$P_{cl} = P_{ch} - N_o Q_n \ge 0$$
$$= 242 - 2 \times 26.1 = 190 \text{ kips}$$

$d_h$ and $d_l$, the distances from the top of the flange to the centroids of $P_{ch}$ and $P_{cl}$, respectively, are calculated using Eqs. 3-17 and 3-18a. Since the ribs are parallel to the steel beams, $b_e$ in Eq. 3-18a is conservatively replaced by $b_{em}$, the sum of the minimum rib widths that lie within $b_e$.

$$d_h = t_s - \frac{P_{ch}}{1.7 f'_c b_e} = 5.5 - \frac{242}{1.7 \times 4 \times 120} = 5.20 \text{ in.}$$

$$d_l = \frac{P_{ch}}{1.7 f'_c b_{em}} = \frac{190}{1.7 \times 4 \times 45} = 0.62 \text{ in.}$$

Using Eq. 3-14,

$$\mu = \frac{2P_r d_r + P_{ch} d_h - P_{cl} d_l}{V_{pt} s_t} = \frac{0 + 242 \times 5.20 - 190 \times 0.62}{35.5 \times 4.12} = 7.99$$

Since $\mu > \nu$, Eq. 3-19 or Fig A.3 should be used to calculate $V_{mt}$. In addition, when $\mu > \nu$, $P_{ch}$ is limited by the tensile capacity of the flange plus reinforcement (if any), Eq. 3-20.

$$P_{ch} \le F_y [t_f (b_f - t_w) + A_r] = 36[0.697(7.555 - 0.415) + 0] = 179 \text{ kips}$$

This value is less than the current value of $P_{ch}$ (242 kips). Therefore, $P_{cl}$, $d_h$, $d_e$ and $\mu$ must also be recalculated. The new values are as follows:

$P_{cl}$[Eq. 3-16] = 127 kips

$d_h$[Eq. 3-17] = 5.28 in.

$d_l$[Eq. 3-18a] = 0.42 in.

$\mu$[Eq. 3-14] = 6.09

Using Eq. 3-19 or Fig A.3 with $\mu = 6.09$ and $\nu = 5.83$, $\alpha_v = 1.045$.

$$V_{mt} = V_{pt} \alpha_v = 35.5 \times 1.045 = 37.10 \text{ kips}$$

Since $\alpha_v > 1$ (i.e., $V_{mt} > V_{pt}$), check $V_{mt}(sh)$ using Eq. 3-21.

$$A_{vc} = 3\, t_s t_e = 3 \times 5.5 \times 4 = 66 \text{ in.}^2$$

$V_{mt}(sh) = V_{pt} + 0.11 f'^{1/2}_c A_{vc} = 35.5 + 0.11(4)^{1/2} = 50.1$ kips $> V_{mt}$ OK

(c) Total shear capacity:

$$V_m = V_{mb} + V_{mt} = 11.5 + 37.1 = 48.6 \text{ kips}$$

$$\phi V_m = 0.85 \times 48.6 = 41.4 \text{ kips}$$

*Check interaction:*

$$\frac{V_n}{\phi V_m} = \frac{46.0}{41.3} = 1.114 \qquad \frac{M_n}{\phi M_m} = \frac{3600}{5318} = 0.677$$

By inspection, the section does not have adequate strength. Using Fig A.1 (reproduced in Fig. 4.14), the point (1.114, 0.674), point 1 on Fig. 4.14, yields a value of R = 1.21> 1.

*Design reinforcement and check strength:*

The addition of reinforcement will increase the capacity at the opening in a number of ways: The moment capacity, $M_m$, will be enhanced due to the increase $A_{sn}$. The shear capacity of the bottom tee will be enhanced due to the increase

in $\mu$ from 0 to $2P_r/(V_{pb}s_b)$. And the shear capacity of the top tee will be enhanced due to increases in $\mu$ from the addition of $P_r$ and an increase in $P_{ch}$. The increase in $P_{ch}$ is obtained because its value is currently limited by the tensile capacity of the top flange alone (Eq. 3-20).

Try $A_r = 0.75$ in.$^2$

$$\Delta A_s = h_o t_w - 2A_r = 4.15 - 1.50 = 2.65 \text{ in.}^2$$

$$A_{sn} = A_s - \Delta A_s = 17.6 - 2.65 = 14.95 \text{ in.}^2$$

*Maximum moment capacity:*

Use Eqs. 3-11a, 3-11b, and 3-11c to calculate the force in the concrete:

$P_c \le 0.85 f'_c b_e t_e = 1632.0$ kips

$P_c \le NQ_n = 14 \times 26.0 = 364.0$ kips CONTROLS—NO CHANGE—

$P_c \le F_y A_{sn} = 36 \times 14.95 = 538.2$ kips

By inspection, $P_{c\,min} < P_c$ OK
As before, $\bar{a} = 0.892$ in.
Using Eq. 3-10,

$$\phi M_m = \phi\left[F_y A_{sn}\frac{d}{2} + F_y \Delta A_s e + P_c\left(t_s - \frac{\bar{a}}{2}\right)\right]$$

$$= 0.85\left[538.2\left(\frac{18.24}{2}\right) + 0 + 364.0\left(5.5 - \frac{0.892}{2}\right)\right]$$

$= 5736$ in.-kips

Since $2A_r < h_o t_o$, $M_m \le M_{pc}$ OK

*Maximum shear capacity:*

$$V_{pb} = V_{pt} = 35.5 \text{ kips}$$

$$\bar{s} = s - \frac{A_r}{2b_f} = 4.12 - \frac{0.75}{2 \times 7.555} = 4.07 \text{ in.}$$

$\nu = \dfrac{a_o}{\bar{s}} = \dfrac{24}{4.07} = 5.90$ for the bottom tee and

for the top tee if $\dfrac{\mu}{\nu} \le 1.0$.

If $\dfrac{\mu}{\nu} > 1.0$ for the top tee, use $\nu = \dfrac{a_o}{s} = 5.83$.

Assume $d_r = 4.12 - 0.125 = 3.995$ in.

$$P_r = F_y A_r \le \frac{F_y t_w a_o}{2\sqrt{3}}$$

$$= 36 \times 0.75 \le 103.5 \text{ kips}$$

$$= 27 \text{ kips} \le 103.5 \text{ kips OK}$$

(a) Bottom tee:

Using Eq. 3-14, $\mu = \dfrac{2P_r d_r}{V_{pb}s_b} = \dfrac{2 \times 27 \times 3.955}{35.5 \times 4.12} = 1.48$

Using Eq. 3-13 or Fig A.2 with $\mu = 1.48$ and $\nu = 5.90$, $\alpha_v = 0.515$.

$$V_{mb} = V_{pb}\alpha_v = 35.5 \times 0.515 = 18.28 \text{ kips}$$

(b) Top tee:
As before, $P_{ch}$ will be governed by Eq. 3-20 for this design.

$$P_{ch} \le F_y[t_f(b_f - t_w) + A_r]$$

$$\le 36[0.697(7.555 - 0.415) + 0.75] = 206.2 \text{ kips}$$

$$P_{cl} = P_{ch} - N_o Q_n \ge 0$$

$$= 206.2 - 2 \times 26.1 = 154.0 \text{ kips}$$

$$d_h = t_s - \frac{P_{ch}}{1.7 f'_c b_e} = 5.5 - \frac{206.2}{1.7 \times 4 \times 120} = 5.25 \text{ in.}$$

$$d_l = \frac{P_{cl}}{1.7 f'_c b_{em}} = \frac{154.0}{1.7 \times 4 \times 45} = 0.50$$

Use Eq. 3-14 to calculate $\mu$.

$$\mu = \frac{2P_r d_r + P_{ch}d_h - P_{cl}d_l}{V_{pt}s_t}$$

$$= \frac{2 \times 27 \times 3.995 + 206.2 \times 5.25 - 154.0 \times 0.50}{35.5 \times 4.12} = 8.35 > \nu$$

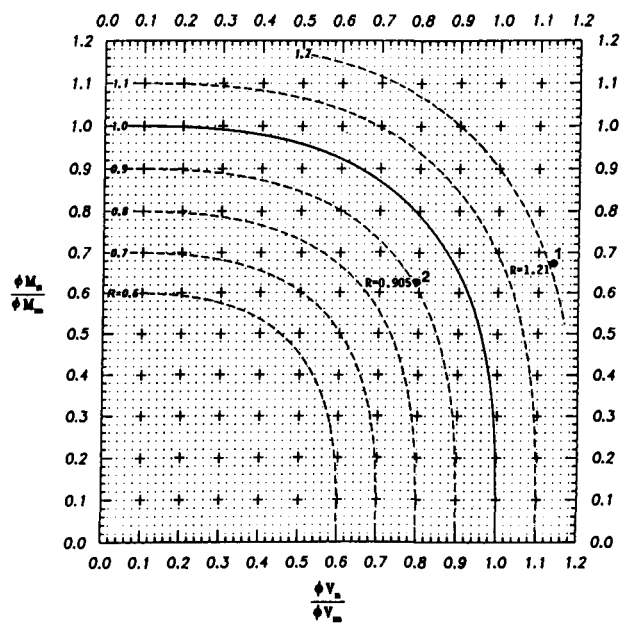


*Fig. 4.14. Moment-shear interaction diagram for opening located 6½ ft from support in Example 4.*

Using Eq. 3-19 or Fig A.3 with $\mu = 9.05$ and $\nu = 5.83$,

$\alpha_v = \frac{\mu}{\nu} = 1.55.$

$V_{mt} = V_{pt}\alpha_v = 35.5 \times 1.55 = 55.0 \text{ kips} > V_m(sh) = 50.1 \text{ kips}$

Since $V_{mt} > V_{mt}(sh)$, use $V_{mt} = V_{mt}(sh) = 50.1$ kips

(c) Total shear capacity:

$V_m = V_{mb} + V_{mt} = 18.28 + 50.10 = 68.38 \text{ kips} \leq \frac{2}{3}\overline{V}_p + \overline{V}_c \text{ OK}$

$\phi V_m = 0.85 \times 68.38 = 58.1$ kips

*Check interaction:*

$$\frac{V_n}{\phi V_m} = \frac{46.0}{58.1} = 0.792 \qquad \frac{M_n}{\phi M_m} = \frac{3600}{5736} = 0.628$$

Using Fig A.1, the point (0.792, 0.628), point 2 in Fig. 4.14, yields a value of $R = 0.905 < 1$ OK. In fact, the section now has about 10 percent excess capacity. If this opening detail will be used many times in the structure, it would be worthwhile to improve the design by reducing the area of reinforcement.

*Select reinforcement:*

Check to see if reinforcement may be placed on one side of the web (Eqs. 3-33 through 3-36).

$A_r \geq \frac{A_f}{3}$ ? OK, by inspection $\frac{a_o}{h_o} \leq 2.5$ ?

$2.4 \leq 2.5$ OK

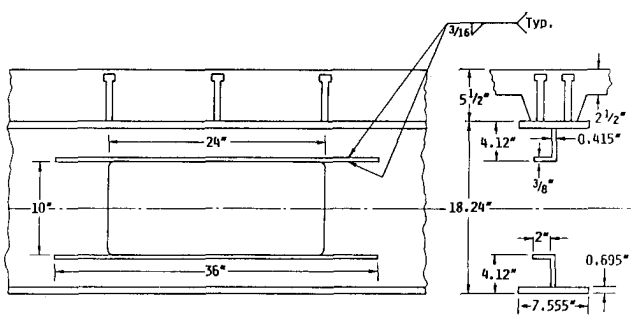


*Fig. 4.15. Completed design of reinforced, concentric opening located 6½ ft from support in Example 4.*

$$\frac{s}{t_w} \leq \frac{140}{\sqrt{F_y}} \text{ ?} \qquad \frac{M_u}{V_u d} \leq 20 \text{ ?}$$

$$\frac{4.12}{0.415} \leq \frac{140}{\sqrt{36}} \text{ ?} \qquad \frac{3600}{46 \times 18.24} \leq 20 \text{ ?}$$

$9.93 \leq 23.3$ OK $\qquad 4.29 \leq 20$ OK

Therefore, reinforcement may be placed on one side of the web.

From the stability check (Eq. 3-22), $b/t \leq 10.83$. Use ⅜×2 in. bar on one side of the web, above and below the opening – $b/t = 5.33$. Note: $d_r = 3.93$ in. and is somewhat less than the value originally assumed. However, the section capacity is clearly adequate.

Extend the reinforcement $\ell = a_o/4 = 6$ in. on either side of the opening for a total length of 36 in. Design the welds in accordance with Eqs. 3-31 and 3-32 (see Example 2).

*Other considerations:*

The corner radii (section 3.7b2) must be $2t_w = 0.83$ in $\geq$ ⅝ in. Use ⅞ in. or larger.

Within a distance $d = 18.24$ in. or $a_o = 24$ in. (controls) of the opening, the slab reinforcement ratio should be a minimum of 0.0025, based on the gross area of the slab (section 3.7cl). The required area of slab reinforcement, $A_{sr}$, in both logitudinal and transverse directions is

$$A_{sr} = 0.0025 \times 5.5 \times 12 = 0.165 \text{ in.}^2/\text{ft}$$

In addition to the shear connectors between the high moment end of the opening and the support, a minimum of two studs per foot should be used for a distance $d$ or $a_o$ (controls in this case) from the high moment end of the opening toward the direction of increasing moment (section 3.7c2). This requirement is satisfied by the original design, which calls for pairs of studs spaced at 1 foot intervals in the outer thirds of the beam.

Finally, if shoring is not used, the beam should be checked for construction loads as a non-composite member (section 3.7c3).

The completed design is illustrated in Fig 4.15.

# Chapter 5
# BACKGROUND AND COMMENTARY

## 5.1 GENERAL

This chapter provides the background and commentary for the design procedures presented in Chapter 3. Sections 5.2a through 5.2g summarize the behavior of steel and composite beams with web openings, including the effects of openings on stress distributions, modes of failure, and the general response of members to loading. Section 5.2h provides the commentary for section 3.2 on load and resistance factors, while sections 5.3 through 5.7 provide the commentary for sections 3.3 through 3.7 on design equations and guidelines for proportioning and detailing beams with web openings. Rev. 3/1/03

## 5.2 BEHAVIOR OF MEMBERS WITH WEB OPENINGS

### a. Forces acting at opening

The forces that act at opening are shown in Fig. 5.1. In the figure, a composite beam is illustrated, but the equations that follow pertain equally well to steel members. For positive bending, the section below the opening, or bottom tee, is subjected to a tensile force, $P_b$, shear, $V_b$, and secondary bending moments, $M_{bl}$ and $M_{bh}$. The section above the opening, or top tee, is subjected to a compressive force, $P_t$, shear, $V_t$, and secondary bending moments, $M_{tl}$ and $M_{th}$. Based on equilibrium,

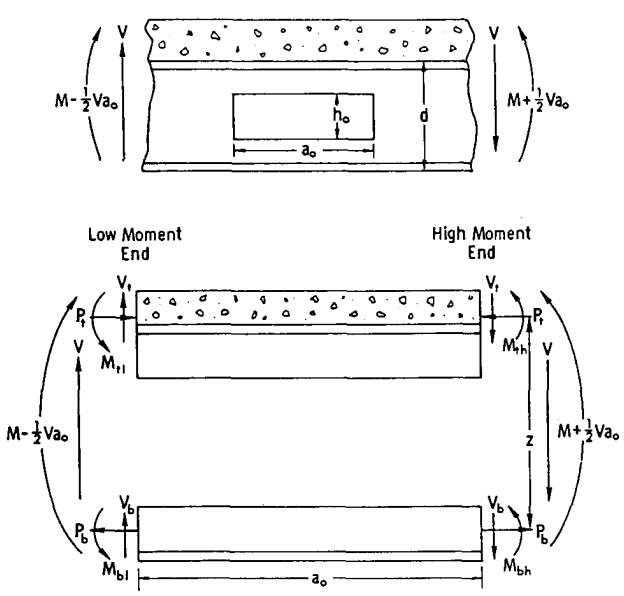


*Fig. 5.1. Forces acting at web opening.*

$$P_b = P_t = P \tag{5-1}$$

$$V = V_b + V_t \tag{5-2}$$

$$V_b a_o = M_{bl} + M_{bh} \tag{5-3}$$

$$V_t a_o = M_{tl} + M_{th} \tag{5-4}$$

$$M = Pz + M_{th} + M_{bh} - \frac{Va_o}{2} \tag{5-5}$$

in which

$V$ = total shear acting at an opening
$M$ = primary moment acting at opening center line
$a_o$ = length of opening
$z$ = distance between points about which secondary bending moments are calculated

### b. Deformation and failure modes

The deformation and failure modes for beams with web openings are illustrated in Fig. 5.2. Figures 5.2(a) and 5.2(b) illustrate steel beams, while Figs. 5.2(c) and 5.2(d) illustrate compbsite beams with solid slabs.

*High moment-shear ratio*

The behavior at an opening depends on the ratio of moment to shear, *M/V* (Bower 1968, Cho 1982, Clawson & Darwin 1980, Clawson & Darwin 1982a, Congdon & Redwood 1970, Donahey & Darwin 1986, Donahey & Darwin 1988, Granada 1968). Rev. 3/1/03

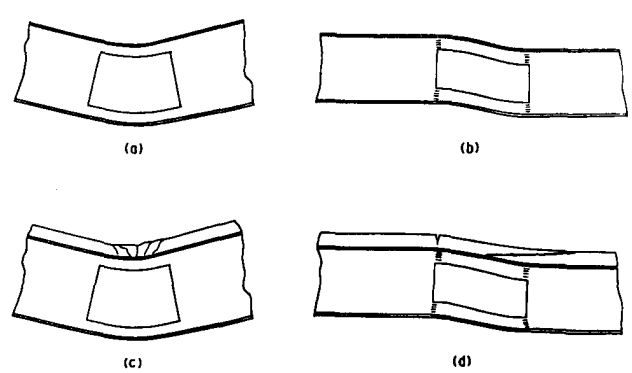


*Fig. 5.2. Failure modes at web openings, (a) Steel beam, pure bending, (b) steel beam, low moment-shear ratio, (c) composite beam with solid slab, pure bending, (d) composite beam with solid slab, low moment-shear ratio.*

*Medium and low moment-shear ratio*

As *M/V* decreases, shear and the secondary bending moments increase, causing increasing differential, or Vierendeel, deformation to occur through the opening [Figs. 5.2(b) and 5.2(d)]. The top and bottom tees exhibit a well-defined change in curvature.

For steel beams [Fig. 5.2(b)], failure occurs with the formation of plastic hinges at all four corners of the opening. Yielding first occurs within the webs of the tees.

For composite beams [Fig. 5.2(d)], the formation of the plastic hinges is accompanied by a diagonal tension failure within the concrete due to prying action across the opening. For members with ribbed slabs, the diagonal tension failure is manifested as a rib separation and a failure of the concrete around the shear connectors (Fig. 5.3). For composite members with ribbed slabs in which the rib is parallel to the beam, failure is accompanied by longitudinal shear failure in the slab (Fig. 5.4).

For members with low moment-shear ratios, the effect of secondary bending can be quite striking, as illustrated by the stress diagrams for a steel member in Fig. 5.5 (Bower 1968) and the strain diagrams for a composite member with a ribbed slab in Fig. 5.6 (Donahey & Darwin 1986). Secondary bending can cause portions of the bottom tee to go into compression and portions of the top tee to go into tension, even though the opening is subjected to a positive bending moment. In composite beams, large slips take place between the concrete deck and the steel section over the opening (Fig. 5.6). The slip is enough to place the lower portion of the slab in compression at the low moment end of the opening, although the adjacent steel section is in tension. Secondary bending also results in tensile stress in the top of the concrete slab at the low moment end of the opening, which results in transverse cracking.

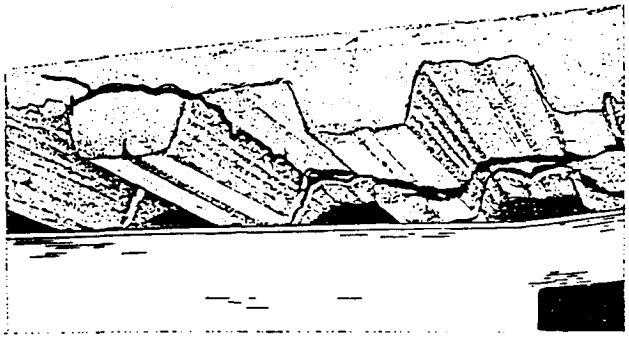

*Fig. 5.3. Rib failure and failure of concrete around shear connectors in slab with transverse ribs.*

*Failure*

Web openings cause stress concentrations at the corners of the openings. For steel beams, depending on the proportions of the top and bottom tees and the proportions of the opening with respect to the member, failure can be manifested by general yielding at the corners of the opening, followed by web tearing at the high moment end of the bottom tee and the low moment end of the top tee (Bower 1968, Congdon & Redwood 1970, Redwood & McCutcheon 1968). Strength may be reduced or governed by web buckling in more slender members (Redwood et al. 1978, Redwood & Uenoya 1979). In high moment regions, compression buckling of the top tee is a concern for steel members (Redwood & Shrivastava 1980). Local buckling of the compression flange is not a concern if the member is a compact section (AISC 1986b).

For composite beams, stresses remain low in the concrete until well after the steel has begun to yield (Clawson & Darwin 1982a, Donahey & Darwin 1988). The concrete contributes significantly to the shear strength, as well as the flexural strength of these beams at web openings. This contrasts with the standard design practice for composite beams, in which the concrete deck is used only to resist the bending moment, and shear is assigned solely to the web of the steel section. Rev. 3/1/03

For both steel and composite sections, failure at web openings is quite ductile. For steel sections, failure is preceded by large deformations through the opening and significant yielding of the steel. For composite members, failure is preceded by major cracking in the slab, yielding of the steel, and large deflections in the member.

First yielding in the steel does not give a good representation of the strength of either steel or composite sections. Tests show that the load at first yield can vary from 35 to 64 percent of the failure load in steel members (Bower 1968, Congdon & Redwood 1970) and from 17 to 52 percent of the failure load in composite members (Clawson & Darwin 1982a, Donahey & Darwin 1988). Rev. 3/1/03

*Fig. 5.4. Longitudinal rib shear failure.*

Rev. 3/1/03

### c. Shear connectors and bridging

For composite members, shear connectors above the opening and between the opening and the support strongly affect the capacity of the section. As the capacity of the shear connectors increases, the strength at the opening increases. This increased capacity can be obtained by either increasing the number of shear connectors or by increasing the capacity of the individual connectors (Donahey & Darwin 1986, Donahey & Darwin 1988). Composite sections are also subject to bridging, the separation of the slab from the steel section. Bridging occurs primarily in beams with transverse ribs and occurs more readily as the slab thickness increases (Donahey & Darwin 1986, Donahey & Darwin 1988).

Rev. 3/1/03

### d. Construction considerations

For composite sections, Redwood and Poumbouras (1983) observed that construction loads as high as 60 percent of member capacity do not affect the strength at web openings. Donahey and Darwin (1986, 1988) observed that cutting openings after the slab has been placed can result in a transverse crack. This crack, however, does not appear to affect the capacity at the opening.

### e. Opening shape

Generally speaking, round openings perform better than rectangular openings of similar or somewhat smaller size (Redwood 1969, Redwood & Shrivastava 1980). This improved performance is due to the reduced stress concentrations in the region of the opening and the relatively larger web regions in the tees that are available to carry shear.

### f. Multiple openings

If multiple openings are used in a single beam, strength can be reduced if the openings are placed too closely together (Aglan & Redwood 1974, Dougherty 1981, Redwood 1968a, Redwood 1968b, Redwood & Shrivastava 1980). For steel beams, if the openings are placed in close proximity, (1) a plastic mechanism may form, which involves interaction between the openings, (2) the portion of the member between the openings, or web post, may become unstable, or (3) the web post may yield in shear. For composite beams, the close proximity of web openings in composite beams may also be detrimental due to bridging of the slab from one opening to another.

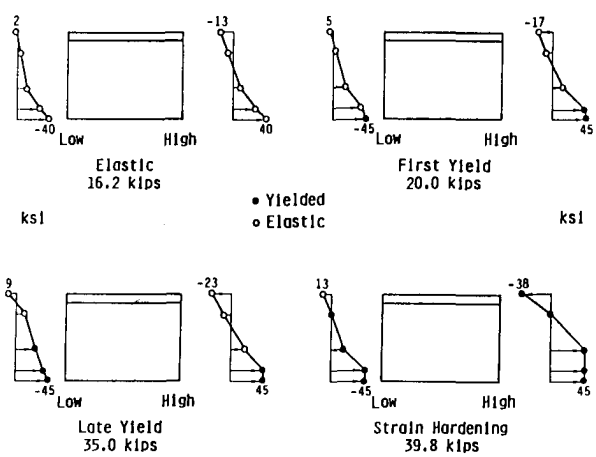


*Fig. 5.5. Stress diagrams for opening in steel beam—low moment-shear ratio (Bower 1968).*

### g. Reinforcement of openings

If the strength of a beam in the vicinity of a web opening is not satisfactory, the capacity of the member can be increased by the addition of reinforcement. As shown in Fig. 5.7, this reinforcement usually takes the form of longitudinal steel bars which are welded above and below the opening (U.S. Steel 1986, Redwood & Shrivastava 1980). To be effective, the bars must extend past the corners of the opening in order to ensure that the yield strength of the bars is fully developed. These bars serve to increase both the primary and secondary flexural capacity of the member.

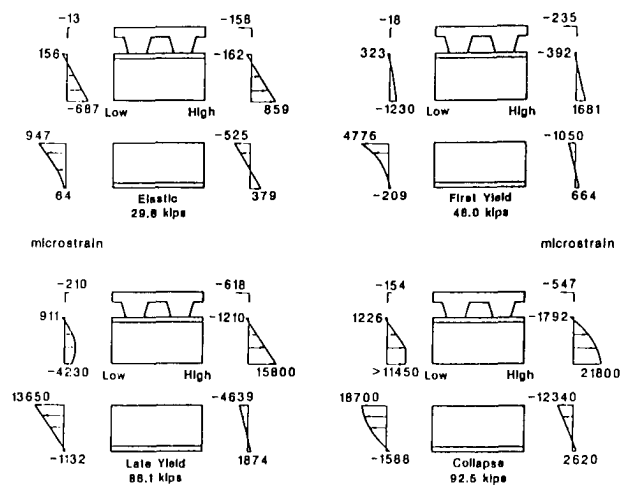


*Fig. 5.6. Strain distributions for opening in composite beam—low moment-shear ratio (Donahey & Darwin 1988).*

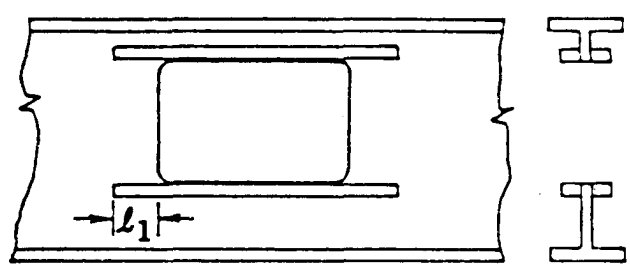


*Fig. 5.7. Reinforced opening.*

**h. Load and resistance factors**

The design of members with web openings is based on strength criteria rather than allowable stresses because the elastic response at web openings does not give an accurate prediction of strength or margin of safety (Bower 1968, Clawson & Darwin 1982, Congdon & Redwood 1970, Donahey & Darwin 1988).

The load factors used by AISC (1986b) are adopted. If alternate load factors are selected for the structure as a whole, they should also be adopted for the regions of members with web openings.

The resistance factors, $\phi$ = 0.90 for steel members and $\phi$ = 0.85 for composite members, coincide with the values of $\phi$ used by AISC (1986b) for flexure. The applicability of these values to the strength of members at web openings was established by comparing the strengths predicted by the design expressions in Chapter 3 (modified to account for actual member dimensions and the individual yield strengths of the flanges, webs, and reinforcement) with the strengths of 85 test specimens (Lucas & Darwin 1990): 29 steel beams with unreinforced openings [19 with rectangular openings (Bower 1968, Clawson & Darwin 1980, Congdon & Redwood 1970, Cooper et al. 1977, Redwood et al. 1978, Redwood & McCutcheon 1968) and 10 with circular openings (Redwood et al. 1978, Redwood & McCutcheon 1968)], 21 steel beams with reinforced openings (Congdon & Redwood 1970, Cooper & Snell 1972, Cooper et al. 1977, Lupien & Redwood 1978), 21 composite beams with ribbed slabs and unreinforced openings (Donahey & Darwin 1988, Redwood & Poumbouras 1983, Redwood & Wong 1982), 11 composite beams with solid slabs and unreinforced openings (Cho 1982, Clawson & Darwin 1982, Granade 1968), and 3 composite beams with reinforced openings (Cho 1982, Wiss et al. 1984). Resistance factors of 0.90 and 0.85 are also satisfactory for two other design methods discussed in this chapter (see Eqs. 5-7 and 5-29) (Lucas & Darwin 1990).

Rev. 3/1/03

## 5.3 DESIGN OF MEMBERS WITH WEB OPENINGS

The interaction between the moment and shear strengths at an opening are generally quite weak for both steel and composite sections. That is, at openings, beams can carry a large percentage of the maximum moment capacity without a reduction in the shear capacity and vice versa.

The design of web openings has historically consisted of the construction of a moment-shear interaction diagram of the type illustrated in Fig. 5.8. Models have been developed to generate the moment-shear diagrams point by point (Aglan & Qaqish 1982, Clawson & Darwin 1983, Donahey & Darwin 1986, Poumbouras 1983, Todd & Cooper 1980, Wang et al. 1975). However, these models were developed primarily for research. For design it is preferable to generate the interaction diagram more simply. This is done by calculating the maximum moment capacity, $M_m$, the maximum shear capacity, $V_m$, and connecting these points with a curve or series of straight line segments. This has resulted in a number of different shapes for the interaction diagrams, as illustrated in Figs. 5.8 and 5.9.

To construct a curve, the end points, $M_m$ and $V_m$, must be determined for all models. Some other models require, in addition, the calculation of $M_v$, which represents the maximum moment that can be carried at the maximum shear [Fig. 5.9(a), 5.9(b)].

Virtually all procedures agree on the maximum moment capacity, $M_m$. This represents the bending strength at an opening subjected to zero shear. The methods differ in how they calculate the maximum shear capacity and what curve shape is used to complete the interaction diagram.

Models which use straight line segments for all or a portion of the curve have an apparent advantage in simplicity of construction. However, models that use a single curve, of the type shown in Fig. 5.9(c), generally prove to be the easiest to apply in practice.

Historically, the maximum shear capacity, $V_m$, has been calculated for specific cases, such as concentric unreinforced openings (Redwood 1968a), eccentric unreinforced openings (Kussman & Cooper 1976, Redwood 1968a, Redwood & Shrivastava 1980, Wang et al. 1975), and eccentric reinforced openings (Kussman & Cooper 1976, Redwood 1971, Redwood

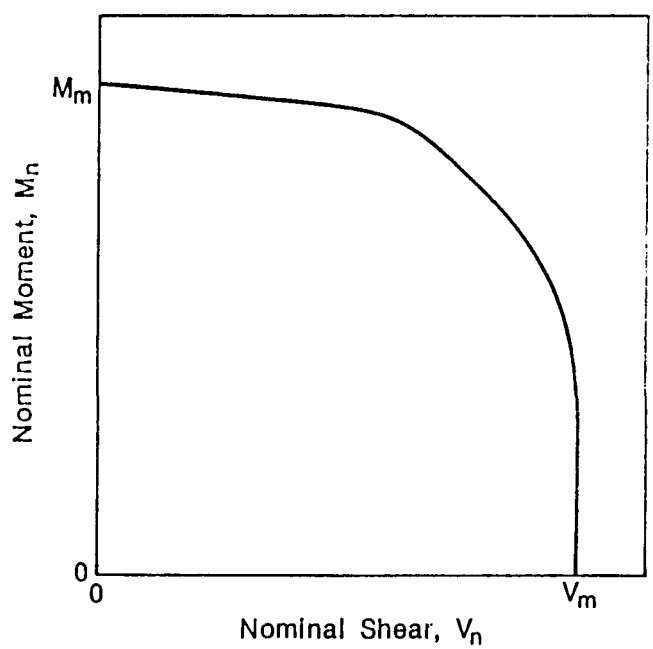


*Fig. 5.8. General moment-shear interaction diagram (Darwin & Donahey 1988).*

& Shrivastava 1980, Wang et al, 1975) in steel beams; and concentric and eccentric unreinforced openings (Clawson & Darwin 1982a, Clawson & Darwin 1982b, Darwin & Donahey 1988, Redwood & Poumbouras 1984, Redwood & Wong 1982) and reinforced openings (Donoghue 1982) in composite beams. Until recently (Lucas & Darwin 1990), there has been little connection between shear capacity expressions for reinforced and unreinforced openings or for openings in steel and composite beams. The result has been a series of specialized equations for each type of construction (U.S. Steel 1986, U.S. Steel 1984, U.S. Steel 1981). As will be demonstrated in section 5.6, however, a single approach can generate a family of equations which may be used to calculate the shear capacity for openings with and without reinforcement in both steel and composite members.

Rev. 3/1/03

The design expressions for composite beams are limited to positive moment regions because of a total lack of test data for web openings in negative moment regions. The dominant effect of secondary bending in regions of high shear suggests that the concrete slab will contribute to shear strength, even in negative moment regions. However, until test data becomes available, opening design in these regions should follow the procedures for steel beams.

The following sections present design equations to describe the interaction curve, and calculate the maximum moment and shear capacities, $M_m$ and $V_m$.

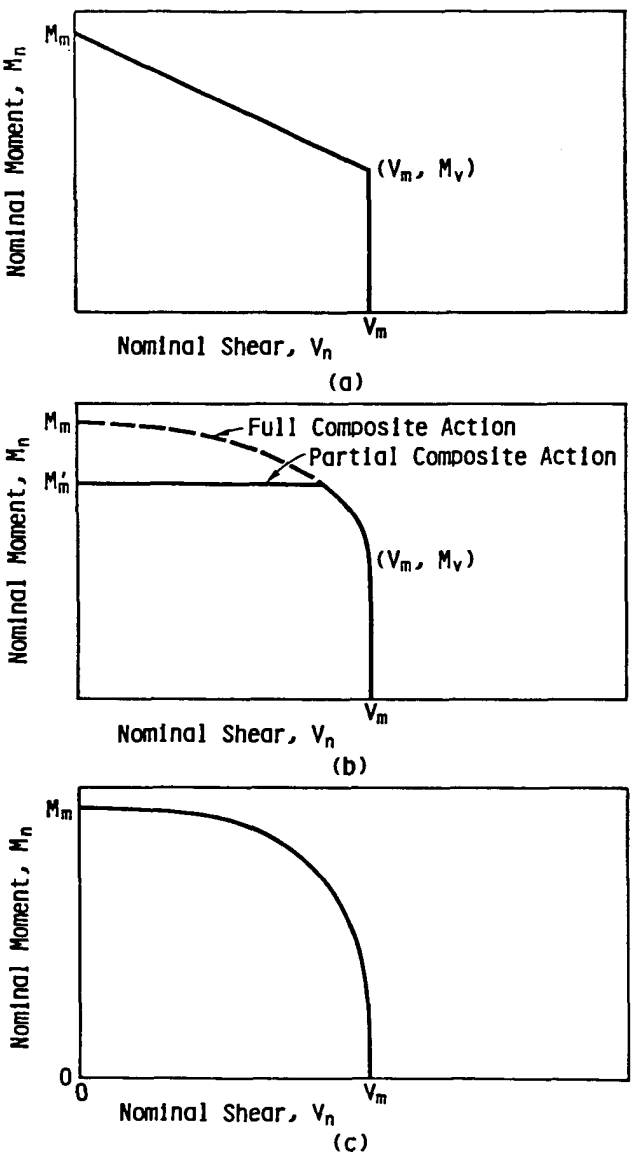


*Fig. 5.9. Moment-shear interaction diagrams, (a) Constructed using straight line segments, (b) constructed using multiple junctions (Redwood & Poumbouras 1983), (c) constructed using a single curve (Clawson & Darwin 1980, Darwin & Donahey 1988).*

## 5.4 MOMENT-SHEAR INTERACTION

The weak interaction between moment and shear strengths at a web opening has been dealt with in a number of different ways, as illustrated in Figs. 5.8 and 5.9. Darwin and Donahey (1988) observed that this weak interaction can be conveniently represented using a cubic interaction curve to relate the nominal bending and shear capacities, $M_n$ and $V_n$, with the maximum moment and shear capacities, $M_m$ and $V_m$ (Fig. 5.10).

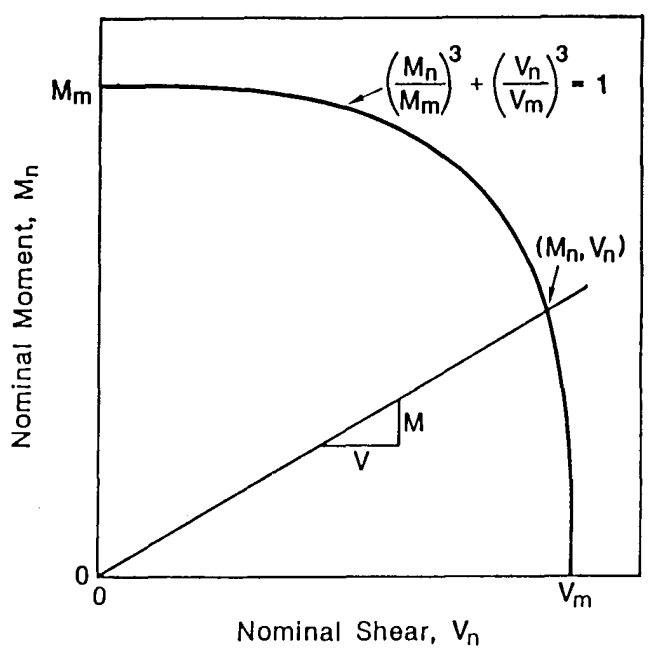


*Fig. 5.10. Cubic interaction diagram (Darwin & Donahey 1988, Donahey & Darwin 1986).*

Rev. 3/1/03

$$\left(\frac{M_n}{M_m}\right)^3 + \left(\frac{V_n}{V_m}\right)^3 = 1 \qquad (5\text{–}6)$$

Equation 5-6 not only provides good agreement with test results, but allows $M_n$ and $V_n$ to be easily calculated for any ratio of factored moment to factored shear, $M_u/V_u$, or for given ratios of factored moment to maximum moment, $M_u/M_m$, and factored shear to maximum shear, $V_u/V_m$.

$$V_n = V_m \left[ \frac{\left(\frac{M_u}{V_u}\right)^3}{\left(\frac{M_m}{V_m}\right)^3} + 1 \right]^{-1/3}$$

$$= V_m \left[ \frac{\left(\frac{M_u}{M_m}\right)^3}{\left(\frac{V_u}{V_m}\right)^3} + 1 \right]^{-1/3} \qquad (5\text{–}7)$$

$$M_n = V_n \left(\frac{M_u}{V_u}\right) \qquad (5\text{–}8)$$

$$M_n = M_m \left[ \frac{\left(\frac{M_m}{V_m}\right)^3}{\left(\frac{M_n}{V_u}\right)^3} + 1 \right]^{-1/3}$$

$$= M_m \left[ \frac{\left(\frac{V_u}{V_m}\right)^3}{\left(\frac{M_u}{M_m}\right)^3} + 1 \right]^{-1/3} \qquad (5\text{–}9)$$

Interaction curves based on a function curve have a distinct advantage over interaction curves consisting of multiple functions or line segments, since they allow the nominal capacities, $M_n$ and $V_n$, to be calculated without having to construct a unique diagram. Since the curve is generic, a single design aid can be constructed for all material and combinations of reinforcement (Fig. A.1).

If the right side of Eq. 5-6 is changed to $R^3$, then a family of curves may be generated to aid in the design process, as illustrated in Figs. 3.2 and A.1 and described in section 3.4.

## 5.5 EQUATIONS FOR MAXIMUM MOMENT CAPACITY

The procedures that have been developed for the design of web openings, as presented in this section, are limited to members that meet the requirements of AISC compact sections (AISC 1986b). This limitation is necessary to prevent instabilities in the web or compression flange of the steel section and to allow the full limit strength to be attained at the opening.

The design expressions for maximum moment capacity, $M_m$, are based on well-established strength procedures. This section presents the design expressions for $M_m$ and explains how the simplified versions in chapter 3 are obtained.

### a. Steel beams

Figure 5.11 illustrates stress diagrams for steel sections in pure bending.

*Unreinforced openings*

For members with unreinforced openings of depth $h_o$, and eccentricity $e$ (always taken as positive for steel sections) [Fig. 5.11(a)], the maximum capacity at the opening is expressed as

$$M_m = M_p - F_y \Delta A_s \left(\frac{h_o}{4} + e\right) \qquad (5\text{–}10)$$

in which $M_p$ = plastic bending moment of unperforated section = $F_y Z$; $\Delta A_s = h_o t_w$; $h_o$ = depth of opening; $t_w$ = thickness of web; $e$ = eccentricity of opening = $|e|$; $Z$ = plastic section modulus; $F_y$ = yield strength of steel.

In Chapter 3, Eq. 3-6 for $M_m$ is obtained by factoring $M_p = F_y Z$ from both terms on the right side of Eq. 5-10.

*Reinforced openings*

For members with reinforced openings of depth $h_o$, cross-sectional area of reinforcement $A_r$ along both the top and bottom edge of the opening, and eccentricity $e \leq F_{yr} A_r/(F_y t_w)$ [Fig. 5.11(b)], the maximum moment may be expressed as

$$M_m = M_p - F_y t_w \left(\frac{h_o^2}{4} + h_o e - e^2\right) + F_{yr} A_r h_o \leq M_p \qquad (5\text{–}11a)$$

$$M_m = F_y \left[ Z - t_w \left(\frac{h_o^2}{4} + h_o e - e^2\right) \right] + F_{yr} A_r h_o \leq M_p \qquad (5\text{–}11b)$$

in which $F_{yr}$ = yield strength of reinforcement

The development of Eq. 5-11 includes two simplifications. First, reinforcement is assumed to be concentrated along the top and bottom edges of the opening, and second, the thickness of the reinforcement is assumed to be small. These assumptions provide a conservative value for $M_m$ and allow

the expressions to be simplified. For $e \neq 0$, the plastic neutral axis, PNA, will be located within the reinforcing bar at the edge of the opening closest to the centroid of the original steel section.

For members with larger eccentricities [Fig. 5.11(c)], i.e., $e \geq F_{yr}A_r/(F_y t_w)$, the maximum moment capacity is

$$M_m = M_p - F_y \Delta A_s \left(\frac{h_o}{4} + e\right) + F_{yr} \Delta A_s \frac{A_r}{2t_w} \leq M_p \qquad (5\text{–}12a)$$

$$M_m = F_y \left[ Z - \Delta A_s \left( \frac{h_o}{4} + e - \frac{F_{yr}}{F_y} \frac{A_r}{2t_w} \right) \right] \leq M_p \qquad (5\text{–}12b)$$

in which $\Delta A_s = h_o t_w - 2A_r F_{yr}/F_y$

Like Eq. 5-11, Eq. 5-12 is based on the assumptions that the reinforcement is concentrated along the top and bottom edges of the opening and that the thickness of the reinforcement is small. In this case, however, the PNA lies in the web of the larger tee. For $A_r = 0$, Eqs. 5-12a and b become identically Eq. 5-10.

In Chapter 3, Eqs. 3-7 and 3-8 are obtained from Eqs. 5-11 and 5-12, respectively, by factoring $M_p = F_y Z$ from the terms on the right-hand side of the equations and making the substitution $F_{yr} = F_y$.

The moment capacity of reinforced openings is limited to the plastic bending capacity of the unperforated section (Redwood & Shrivastava 1980, Lucas and Darwin 1990).

### b. Composite beams

Figure 5.12 illustrates stress diagrams for composite sections in pure bending. For a given beam and opening configuration, the force in the concrete, $P_c$, is limited to the lower of the concrete compressive strength, the shear connector capacity, or the yield strength of the net steel section.

$$P_c \leq 0.85 f'_c b_e t_e \qquad (5\text{-}13a)$$

$$\leq NQ_n \qquad (5\text{-}13b)$$

$$\leq T' = F_y A_{sn} \qquad (5\text{-}13c)$$

in which $A_{sn}$ = net steel area $= A_s - h_o t_w + 2A_r F_{yr}/F_y$

The maximum moment capacity, $M_m$, depends on which of the inequalities in Eq. 5-13 governs.

If $P_c = T'$ [Eq. 5-13c and Fig. 5.12(a)],

$$M_m = T' \left( \frac{d}{2} + \frac{\Delta A_s e}{A_{sn}} + t_s - \frac{\bar{a}}{2} \right) \qquad (5\text{–}14)$$

in which $\Delta A_s = h_o t_w - 2A_r F_{yr}/F_y$

$\bar{a}$ = depth of concrete compression block $= P_c/(0.85 f'_c b_e)$ for solid slabs and ribbed slabs for which $\bar{a} \leq t'_s$.

If $\bar{a} > t'_s$, as it can be for ribbed slabs with longitudinal ribs, the term $\left(t_s - \frac{\bar{a}}{2}\right)$ in Eq. 5-14 must be replaced with the appropriate expression for the distance between the top of the steel flange and the centroid of the concrete force.

If $P_c < T'$ (Eq. 5-13a or 5-13b), a portion of the steel section is in compression. The plastic neutral axis, PNA, may be in either the flange or the web of the top tee, based on the inequality:

$$P_c + F_y A_f \lessgtr F_y (A_{sn} - A_f) \qquad (5\text{-}15)$$

in which $A_f$ = the flange area $= b_f t_f$.

If the left side of Eq. 5-15 exceeds the right side, the PNA is in the flange [Fig. 5.12b] at a distance $x = (A_{sn}F_y - P_c)/(2b_f F_y)$ from the top of the flange. In this case,

$$M_m = T' \left( \frac{d}{2} + \frac{\Delta A_s e - b_f x^2}{A_{sn}} \right) + P_c \left( t_s - \frac{\bar{a}}{2} \right) \qquad (5\text{–}16)$$

Rev. 3/1/03

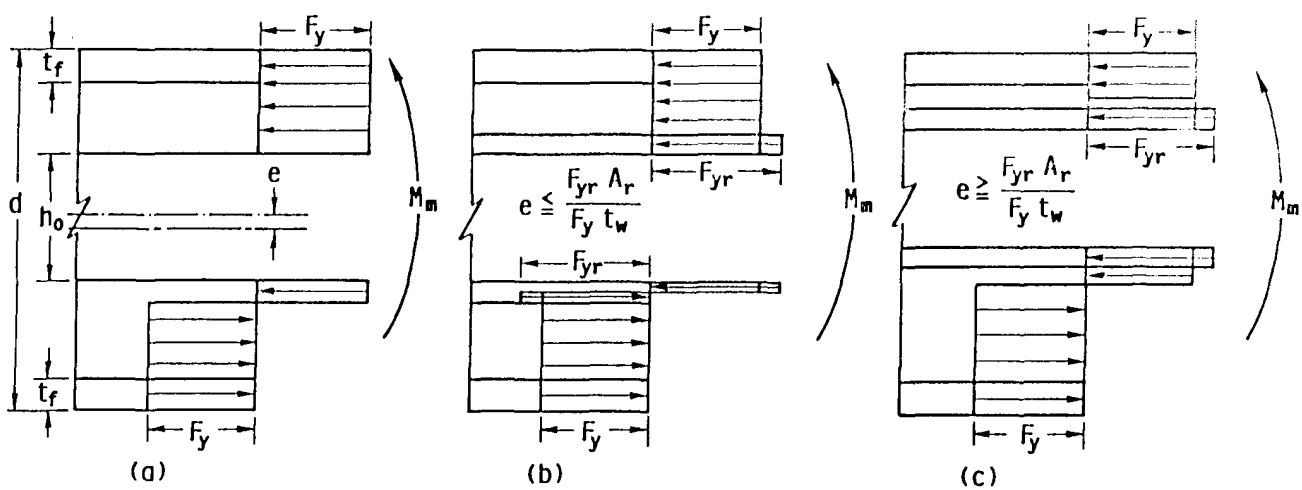


*Fig. 5.11. Steel sections in pure bending, (a) Unreinforced opening, (b) reinforced opening, $e \leq F_{yr}A_r/(F_y t_w)$, (c) reinforced opening, $e \geq F_{yr}A_r/(F_y t_w)$.*

If the right side of Eq. 5-15 is greater than the left side, the neutral axis is in the web [Fig. 5.12(c)] at a distance $x = (A_{sn} - 2A_f)/(2t_w) - P_c/(2F_y t_w) + t_f$ from the top of the flange. In this case,

$$M_m = T'\left[\frac{d}{2} + \frac{\Delta A_s e - (b_f - t_w)t_f^2 - t_w x^2}{A_{sn}}\right] + P_c\left(t_s - \frac{\bar{a}}{2}\right) \tag{5-17}$$

In Chapter 3, Eq. 3-9 is obtained from Eq. 5-14 by factoring the nominal capacity of the composite section without an opening, $M_{pc}$, from the terms on the right hand side of the equation, setting $F_{yr} = F_y$, and assuming that the depth of the concrete compression block, $\bar{a}$, does not change significantly due to the presence of the opening and the reinforcement. This approximation is conservative for $A_{sn} \leq A_s$ and is usually accurate within a few percent. Equation 3-10 is obtained from Eqs. 5-16 and 5-17 assuming that the term $-b_f x^2/A_{sn}$ in Eq. 5-16 and the term $[-(b_f - t_w)t_f^2 - t_w x^2]/A_{sn}$ in Eq. 5-17 are small compared to $d/2$. Equation 3-10 is exact if the PNA is above the top of the flange and always realistic if the PNA is in the flange. However, it may not always be realistic if the PNA is in the web, if $P_c$ is small. Since the approximation for $M_m$ in Eq. 3-10 is exact or *unconservative*, a limitation on its application is necessary. The limit on $P_c$, $P_{c\,min} = F_y(\frac{3}{4}t_w d - \Delta A_s)$, ensures that the neglected terms are less than 0.04(d/2) for members in which the flange area equals or exceeds 40 percent of the web area [i.e., $(b_f - t_w)t_f \geq 0.4\ t_w d$]. The 40 percent flange-to-web area ratio criterion is conservative, and the accuracy of Eq. 3-10 improves as this ratio increases.

For safety in design, the value of $M_m$ in Eqs. 5-14, 5-16 and 5-17 should be limited to the nominal capacity of the unperforated section, $M_{pc}$, when reinforcement is used (Lucas & Darwin 1990).

## 5.6 EQUATIONS FOR MAXIMUM SHEAR CAPACITY

The procedure used to calculate the maximum shear capacity at a web opening, $V_m$, is one of the key aspects that distinguishes one design method from another. The procedures presented here are an adaptation (Lucas & Darwin 1990) of techniques developed by Darwin and Donahey (1988, 1986) that have proven to give accurate results for a wide range of beam configurations.

$V_m$ is calculated by considering the load condition in which the axial forces at the top and bottom tees, $P_t$ and $P_b$ = 0 (Fig. 5.13). This load condition represents the "pure" shear ($M$ = 0) for steel sections and is a close approximation of pure shear for composite sections. This load case does not precisely represent pure shear for composite beams because, while the secondary bending moments at each end of the bottom tee are equal, the secondary bending moments at each end of the top tee are not equal because of the unequal contributions of the concrete at each end. Thus, the moment at the center line of the opening has a small but finite value for composite sections.

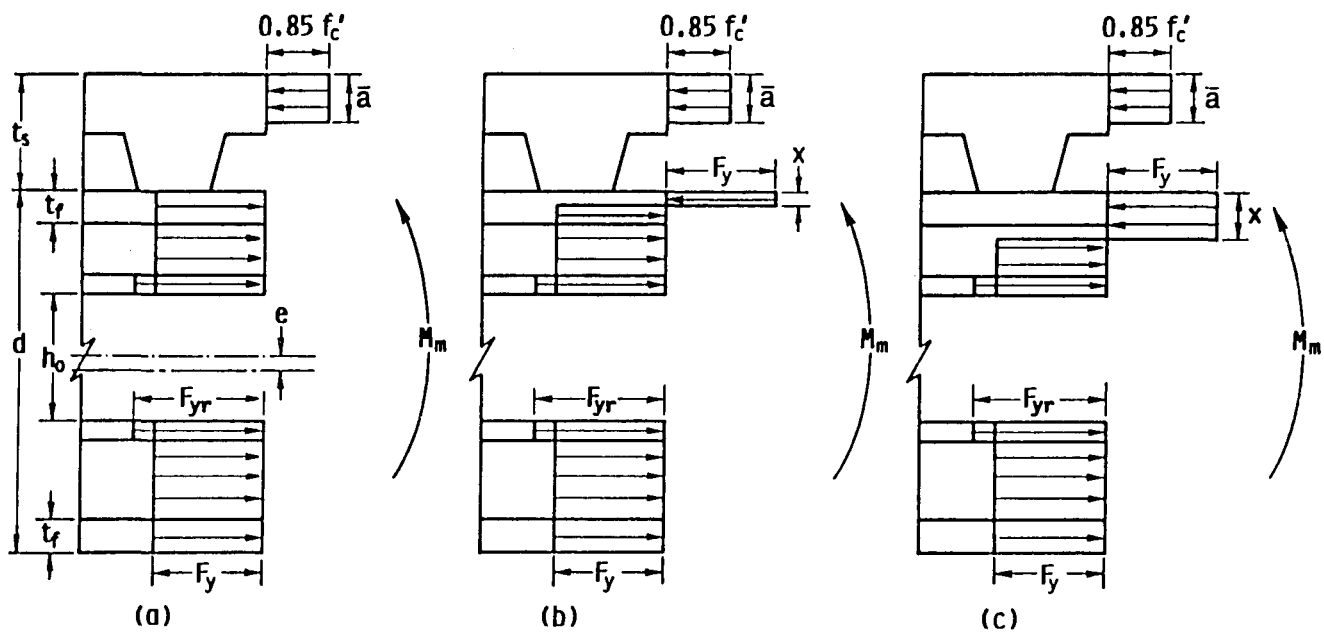


Fig. 5.12. *Composite sections in pure bending, (a) Neutral axis above top of flange, (b) neutral axis in flange, (c) neutral axis in web.*

The capacity at the opening, $V_m$, is obtained by summing the individual capacities of the bottom and top tees.

$$V_m = V_{mb} + V_{mt} \tag{5-18}$$

$V_{mb}$ and $V_{mt}$ are calculated using the moment equilibrium equations for the tees, Eq. 5-3 and 5-4, and appropriate representations for the stresses in the steel, and if present, the concrete and opening reinforcement. Since the top and bottom tees are subjected to the combined effects of shear and secondary bending, interaction between shear and axial stresses must be considered in order to obtain an accurate representation of strength. The greatest portion of the shear is carried by the steel web.

The interaction between shear and normal stress results in a reduced axial strength, $\bar{F}_y$, for a given material strength, $F_y$, and web shear stress, $\tau$, which can be represented using the von Mises yield criterion.

$$\bar{F}_y = (F_y^2 - 3\tau^2)^{1/2} \tag{5-19}$$

The interaction between shear and axial stress is not considered for the concrete. However, the axial stress in the concrete is assumed to be $0.85f'_c$ when $V_m$ is obtained.

The stress distributions shown in Fig. 5.13, combined with Eqs. 5-3 and 5-4 and Eq. 5-19, yield third order equations in $V_{mb}$ and $V_{mt}$. These equations must be solved by iteration, since a closed-form solution cannot be obtained (Clawson & Darwin 1980).

For practical design, however, closed-form solutions are desirable. Closed-form solutions require one or more additional simplifying assumptions, which may include a simplified version of the von Mises yield criteria (Eq. 5-19), limiting neutral axis locations in the steel tees to specified locations, or ignoring local equilibrium within the tees.

As demonstrated by Darwin & Donahey (1988), the form of the solution for $V_{mb}$ and $V_{mt}$ depends on the particular assumptions selected. The expressions in Chapter 3 use a simplified version of the von Mises criterion and ignore some aspects of local equilibrium within the tees. Other solutions may be obtained by using fewer assumptions, such as the simplified version of the von Mises criterion only or ignoring local equilibrium within the tees only. The equations used in Chapter 3 will be derived first, followed by more complex expressions.

### a. General equation

A general expression for the maximum shear capacity of a tee is obtained by considering the most complex configuration, that is, the composite beam with a reinforced opening. Expressions for less complex configurations are then obtained by simply removing the terms in the equation corresponding to the concrete and/or the reinforcement.

The von Mises yield criterion, Eq. 5-19, is simplified using a linear approximation.

$$\bar{F}_y = \lambda F_y - \boxed{\tau\sqrt{3}} \tag{5-20}$$

Rev. 3/1/03

The term $\lambda$ can be selected to provide the best fit with data. Darwin and Donahey (1988) used $\lambda = (1 + \sqrt{2})/2 = 1.207...$, for which Eq. 5-20 becomes the linear best uniform approximation of the von Mises criterion. More recent research (Lucas & Darwin 1990) indicates that $\lambda = \sqrt{2} = 1.414...$ gives a better match between test results and predicted strengths. Figure 5.14 compares the von Mises criterion with Eq. 5-20 for these two values of $\lambda$. As illustrated in Fig. 5.14, a maximum shear cutoff, $\tau \leq F_y/\sqrt{3}$, based on the von Mises criterion, is applied. Figure 5.14 also shows that the axial stress, $\bar{F}_y$, may be greatly overestimated for low values of shear stress, $\tau$. However, the limitations on $p_o$ (section 3.7a2) force at least one tee to be stocky enough (low value of $\nu$) that the calculated value of $V_m$ is conservative. In fact, comparisons with tests of steel beams show that the predicted strengths are most conserva-

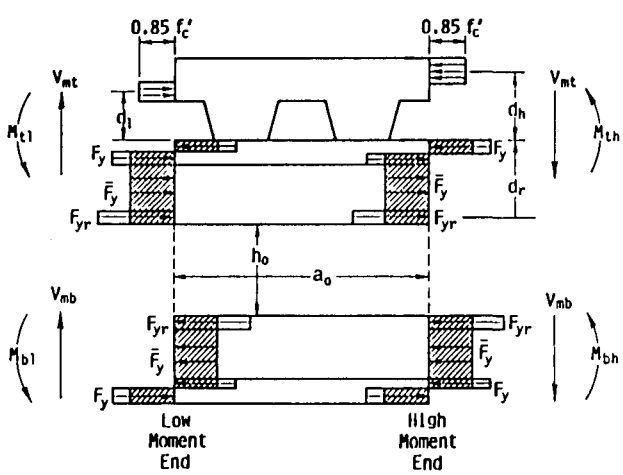


*Fig. 5.13. Axial stress distributions for opening at maximum shear.*

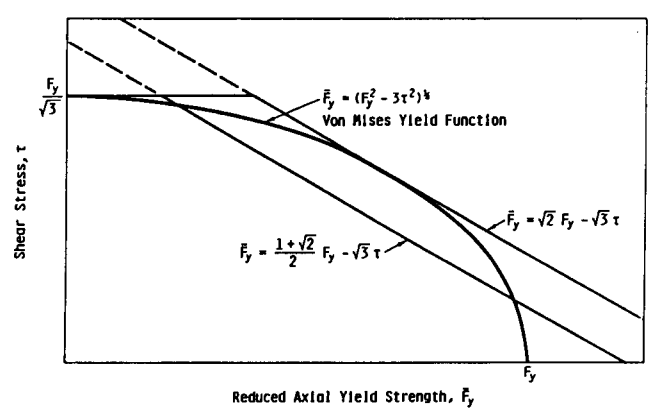


*Fig. 5.14. Yield functions for combined shear and axial stress.*

live for openings with low moment-shear ratios (Lucas & Darwin 1990), cases which are most sensitive to the approximation in Eq. 5-20.

*Equation 3-13 for $V_{mb}$ and $V_{mt}$*

To obtain Eq. 3-13 for $V_{mb}$ and $V_{mt}$, the stress distribution shown in Fig. 5.15 is used in conjunction with Eqs. 5-3 and 5-4. This distribution represents a major simplification of the distribution shown in Fig. 5.13, since the flange stresses are not used to calculate the secondary moments. This approximation can be justified, because the plastic neutral axis usually lies in the flange and the flange thickness, $t_f$, is small relative to the stub depth. Thus, the contribution of the flanges to the secondary moments is small. Using this approximation, the normal and shear stresses in the web are assumed to be uniform through the stub depth, ignoring local equilibrium.

The top tee in Fig. 5.15 is used to develop an equation for the maximum shear capacity of a tee in general form. The equilibrium equation for moments taken about the top of the flange at the low moment end of the opening is

$$V_{mt}a_o - \bar{F}_y s_t^2 + 2P_r d_r + P_{ch}d_h - P_{cl}d_l \quad (5\text{–}21)$$

in which $a_o$ = length of opening; $s_t$ = depth of top tee; $P_r$ = force in reinforcement along edge of opening = $F_{yr}A_r \le \dfrac{F_y a_o t_w}{2\sqrt{3}}$; $d_r$ = distance from outside edge of flange to centroid of reinforcement; $P_{ch}$ and $P_{cl}$ = concrete forces at high and low moment ends of opening, respectively [For top tee in composite sections only. See Eqs. 3-15a through 3-16]; and $d_h$ and $d_l$ = distances from outside edge of top flange to centroid of concrete force at high and low moment ends of opening, respectively. [For top tee in composite sections only. See Eqs. 3-17 through 3-18b.]

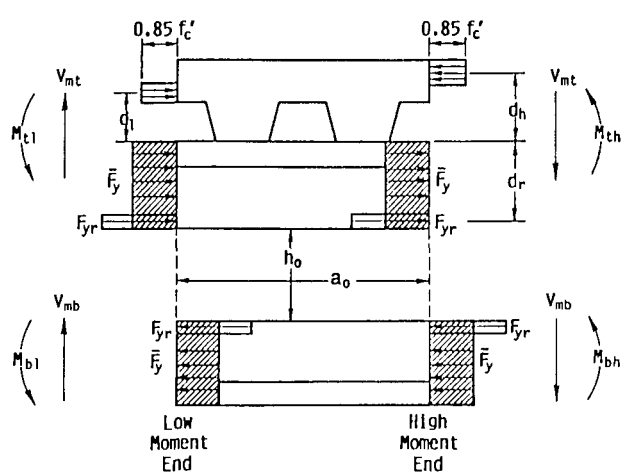


*Fig. 5.15. Simplified axial stress distributions for opening at maximum shear.*

Using Eq. 5-20 for $\bar{F}_y$, $\tau = V_{mt}/(t_w s_t)$, and $F_y = \sqrt{3}V_{pt}/(t_w s_t)$ in Eq. 5-21 results in a linear equation in $V_{mt}$. The solution of the equation takes the following simple form:

$$V_{mt} = V_{pt}\left(\frac{\sqrt{3}\lambda + \mu}{\nu + \sqrt{3}}\right) = V_{pt}\alpha_v \le V_{pt} \quad (5\text{–}22)$$

in which

$$V_{pt} = \frac{F_y t_w s_t}{\sqrt{3}} \quad (5\text{–}23)$$

$$\nu = \frac{a_o}{s_t} \quad (5\text{–}24)$$

$$\mu = \frac{2P_r d_r + P_{ch}d_h - P_{cl}d_l}{V_{pt}s_t} \quad (5\text{–}25)$$

With $\lambda = \sqrt{2}$, Eq. 5-22 becomes Eq. 3-13.

One modification to the definition of $\nu$ in Eq. 5-24 is necessary for reinforced openings. When reinforcement is added, the PNA in the flange of the steel section (Fig. 5.13) will move. This movement effectively reduces the moment arm of the normal stresses in the web, $s_t/2$, and the moment arm of the reinforcement $d_r$. The movement of the PNA can be reasonably accounted for by modifying the $s_t$ term *in Eq. (5-24) only* (Lucas & Darwin 1990).

$$\bar{s}_t = s_t - \frac{A_r F_{yr}}{2b_f F_y} \quad (5\text{–}26)$$

in which $b_f$ = width of flange. The term $A_r F_{yr}/(2bF_y)$ in Eq. 5-26 approximates the movement of the PNA due to the addition of the reinforcement.

The expressions for $P_r$ and $\bar{s}_t$ in Chapter 3 are based on the assumption that $F_{yr} = F_y$. A limit is placed on $P_r$, $P_r \le F_y t_w a_o/(2\sqrt{3})$, based on the shear strength of the web. This requirement conservatively replaces the shear rupture strength requirement of section J4 of AISC (1986b).

An expression for the shear capacity of the bottom tee, $V_{mb}$, is obtained by suitable substitutions in Eqs. 5-22 through 5-26.

A direct calculation can be made to estimate the reinforcement needed by steel beams to provide a desired maximum shear strength, $V_m$. The calculation is based on the simplifying assumption that $d_r = s$ in Eq. 3-14 and 5-25. Since $\mu = 2P_r d_r/V_p s$ and $P_r$ is the same for the top and bottom tees, $\mu_b = \mu_t V_{pt}/V_{pb}$. Taking $V_m = V_{mb} + V_{mt}$ and making appropriate substitutions,

$$\mu_t = \frac{V_m(\nu_b + \sqrt{3})(\nu_t + \sqrt{3}) - \sqrt{6}[V_{pb}(\nu_t\sqrt{3}) + V_{pt}(\nu_b + \sqrt{3})]}{V_{pt}(\nu_b + \nu_t + 2\sqrt{3})}$$

Once $\mu_t$ is obtained, $\mu_b$, $P_r$, and $A_r$ can be calculated.

An equivalent expression cannot be easily obtained for composite beams. Selection of a trial value of reinforcement,

however, provides a straightforward solution for both steel and composite beams, as illustrated in Examples 2 and 4 in Chapter 3.

*Alternate equations for $V_{mb}$ and $V_{mt}$:*

If the full von Mises criterion (Eq. 5-19) is used, instead of the linear approximation (Eq. 5-20), to represent $\overline{F}_y$ in Eq. 5-21, a quadratic equation is obtained for $V_{mt}$. The solution of that equation takes a somewhat more complex form than Eq. 5-21.

$$V_{mt} = V_{pt}\left[\frac{\mu\nu + (3\nu^2 - 3\mu^2 + 9)^{1/2}}{3 + \nu^2}\right] \leq 1 \qquad (5\text{-}27)$$

in which $V_{pt}$, $\nu$ and $\mu$ are as previously defined. For non-composite tees without reinforcement, Eq. 5-27 takes a simpler form.

$$V_{mt} = V_{pt}\left(\frac{3}{3 + \nu^2}\right)^{1/2} \leq 1 \qquad (5\text{-}28)$$

Equations 5-27 and 5-28 are identical with those used by Redwood and Poumbouras (1984) and by Darwin and Donahey (1988) in their "Solution II." These equations completely satisfy the von Mises criterion, but, perhaps surprisingly, do not provide a closer match with experimental data than Eq. 5-22 (Lucas & Darwin 1990).

To obtain a better match with experimental results requires another approach (Darwin & Donahey 1988, Lucas & Darwin 1990). This approach uses the linear approximation for the von Mises criterion (Eq. 5-19) to control the interaction between shear and normal stresses within the web of the steel tee, but uses a stress distribution based on the full cross-section of the steel tee (Fig. 5.13) to develop the secondary moment equilibrium equation (Eq. 5-4). The PNA is assumed to fall in the flange of the steel tee; its precise location is accounted for in the solution for $V_{mt}$.

$V_{mt}$ is expressed as follows:

$$V_{mt} = F_y\left(\frac{\beta_t - \sqrt{\beta_t^2 - 4\alpha_t\gamma_t}}{2\alpha_t}\right) \qquad (5\text{–}29)$$

in which $\alpha_t = 3 + 2\sqrt{3}\,\dfrac{a_o}{s_t}$

$$\beta_t = 2\sqrt{3}(b_f - t_w)\left(s_t - t_f + \frac{t_f^2}{s_t}\right) + 2\sqrt{3}\lambda t_w s_t + 2a_o[b_f + (\lambda - 1)t_w]$$

Rev. 3/1/03

$$+ \frac{2\sqrt{3}}{s_t F_y}(2P_r d_r + P_{ch} d_h - P_{cl}\boxed{d_l}) + \frac{\sqrt{3}}{F_y}(P_{ch} - P_{cl} - 2P_r)$$

$$\gamma_t = (b_f - t_w)^2 t_f^2 + \lambda^2 t_w^2 s_t^2 + 2\lambda t_w (b_f - t_w)(s_t^2 - s_t t_f + t_f^2)$$

$$+ \frac{2[b_f + (\lambda - 1)t_w]}{F_y}(2P_r d_r + P_{ch} d_h - \boxed{P_{cl} d_l}) -$$

Rev. 3/1/03

$$\frac{(2P_r^2 + P_{ch}^2 + P_{cl}^2)}{2F_y^2}$$

$$+ \frac{[(b_f - t_w)t_f + \lambda t_w s_t]}{F_y}(P_{ch} - P_{cl} - 2P_r) + \frac{P_r(P_{ch} - P_{cl})}{F_y^2}$$

Equation 5-29 is clearly more complex than Eqs. 5-22 and 5-27 and is best suited for use with a programmable calculator or computer. It has the advantages that it accounts for the actual steel section and does not require a separate calculation for $\bar{s}$ when reinforcement is used. With $\lambda = \sqrt{2}$, Eq. 5-29 produces a closer match with the experimental data than the other two options (Lucas & Darwin 1990). However, since the flange is included in the calculations, Eq. 5-29 cannot be used to produce a general design aid.

Expressions for tees without concrete and/or opening reinforcement can be obtained from Eqs. 5-29 by setting $P_{ch}$ and $P_{cl}$ or $P_r$ to zero, as required.

**b. Composite beams**

As explained in Chapter 3, a number of additional expressions are required to calculate the shear capacity of the top tee in composite beams.

The forces in the concrete at the high and low moment ends of the opening, $P_{ch}$ and $P_{cl}$, and the distances to these forces from the top of the flange of the steel section, $d_h$ and $d_h$ are calculated using Eqs. 3-15a through 3-18b. $P_{ch}$ is limited by the force in the concrete, based on an average stress of $0.85f'_c$, $0.85f'_c b_e t_e$, the stud capacity between the high moment end of the opening and the support, $NQ_n$, and the tensile capacity of the top tee steel section, $F_y A_{st}$. The third limitation ($F_y A_{st}$) was not originally used in conjunction with Eqs. 5-22 and 5-27, because it was felt to be inconsistent with a model (Fig. 5-15) that ignored the flange of the steel tee (Darwin & Donahey 1988, Donahey & Darwin 1986). Lucas and Darwin (1990), however, have shown that generally improved solutions are obtained when all these limitations are used in conjunction with Eqs. 5-22 and 5-27, as well as Eq. 5-29 which considers the flange.

The number of studs, $N$, used for the calculation of $P_{ch}$ includes the studs between the high moment end of the opening and the support, not the point of zero moment. This change from normal practice takes into account the large amount of slip that occurs between the slab and the steel section at openings, which tends to mobilize stud capacity, even studs in negative moment regions (Darwin & Donahey 1988, Donahey & Darwin 1986, Donahey & Darwin 1988). To use the more conservative approach will greatly underestimate the shear capacity of openings placed at a point of contraflexure (Donahey & Darwin 1986).

The difference between $P_{ch}$ and $P_{cl}$ (Eq. 3-16) is equal to the shear connector capacity over the opening, $N_o Q_n$.

$V_{mt} > V_{pt}$:

Equations 5-22, 5-27, and 5-29 are based on the assumption that all of the shear carried by a tee is carried by the steel web. This assumption yields consistent results for steel tees, but may be overconservative for top tees in composite beams, since the concrete slab may also carry shear. If $V_{mt}$ in these expressions exceeds $V_{pt}$, the web is fully yielded in shear ($\overline{F}_y = 0$). Equilibrium requires that $P_{ch}$ is limited to the axial strength of the flange and the reinforcement in the top tee, as given by Eq. 3-20, $P_{ch} \leq F_y[t_f(b_f - t_w) + A_r]$ in which $t_f$ = thickness of flange. This limit on $P_{ch}$ replaces Eq. 3-15c.

Resolving Eq. 5-21 yields

$$V_{mt} = \frac{2P_r d_r + P_{ch} d_h - P_{cl} d_l}{a_o} \geq V_{pt} \qquad (5\text{–}30a)$$

$$V_{mt} = V_{pt}\frac{\mu}{\nu} = V_{pt}\alpha_v \geq V_{pt} \qquad (5\text{–}30b)$$

Equation 5-30b is equivalent to Eq. 3-19. Since $V_{mt}$ is correctly defined by Eq. 5-30a, $\nu$, as well as $\mu$, in Eq. 5-30b is calculated based on s for reinforced openings.

If the flange of the top tee is included in the equilibrium equation once $\overline{F}_y = 0$, the solution for $V_{mt}$ yields

$$V_{mt} = \frac{1}{a_o}\left[2P_r d_r + P_{ch} d_h - P_{cl} d_l + \frac{t_f}{2}(P_{ch} - P_{cl} - 2P_r) + \frac{F_y}{2}(b_f - t_w)t_f^2 + \frac{2P_r(P_{ch} - P_{cl}) - 2P_r^2 - P_{ch}^2 - P_{cl}^2}{4F_y(b_f - t_w)}\right] \leq V_{pt} \qquad (5\text{–}31)$$

The value of $V_{mt}$ calculated with Eq. 5-31 slightly exceeds the value obtained with Eq. 5-30. Equation 5-31 has been used in conjunction with Eq. 5-29, while Eq. 5-30 has been used with Eqs. 5-22 and 5-27 (Cho & Redwood 1986, Darwin & Donahey 1988, Donahey & Darwin 1986, AISC 1986b).

An upper limit is placed on $V_{mt}$ in Eq. 3-21, based on the maximum combined capacity of the steel web and the concrete slab in pure shear.

The contribution of the concrete to the maximum shear capacity of the top tee in Eq. 3-21, $0.11 f'_c A_{vc}$, was originally estimated for solid slabs, based on the shear behavior of reinforced concrete beams and slabs (Clawson & Darwin 1980, Clawson & Darwin 1983), and later modified for ribbed slabs (Darwin & Donahey 1988, Donahey & Darwin 1986). Equation 3-21 generally governs $V_{mt}$ only for beams with short openings, usually $a_o < d$.

### c. Design aids

The design aids presented in Appendix A, Figs. A.2 and A.3, represent $\alpha_v = V_{mb}/V_{pb}$ or $V_{mt}/V_{pt}$, as a function of $\nu = a_o/s$ or $a_o/\overline{s}$ for values of $\mu$ ranging from 0 to 23.

The upper limit of $\alpha_v = V_{mt}/V_{pt} = 2$ in Fig. A.3 is selected for convenience and clarity of the diagram. Only two beams in all of the tests exceeded this value (Lucas & Darwin 1990). For most practical cases, $\alpha_v$ will be less than 2.

The upper limit of $\nu = 12$ coincides with the maximum value used in tests of members subjected to shear (Lucas & Darwin 1990).

## 5.7 GUIDELINES FOR PROPORTIONING AND DETAILING BEAMS WITH WEB OPENINGS

The guidelines presented in section 3.7 are based on both theoretical considerations and experimental observations. Many of the guidelines were originally developed for non-composite beams (Redwood & Shrivastava 1980, ASCE 1973) and are adopted as appropriate for composite members. The guidelines are meant to help ensure that the limit states predicted by the design equations are obtained. For this reason, steel sections should meet the AISC requirements for compact sections (AISC 1986b). Yield strength, $F_y$, is limited to 65 ksi since plastic design is the basis for the design expressions. The other provisions of the AISC LRFD Specifications (AISC 1986b) should apply to these members as well.

### a. Stability considerations

*1. Local buckling of compression flange or reinforcement*

To prevent local buckling of the compression flange or reinforcement at an opening, the AISC (1986b) criteria for compact sections is applied to the reinforcement as well as the steel section (Eq. 3-22).

*2. Web buckling*

The criteria to prevent web buckling are based on the work of Redwood and Uenoya (1979) in which they developed conservative criteria based on the opening size and shape and the slenderness of the web of the member. The recommendations are based on both experimental (Redwood et al. 1978) and analytical work (Redwood & Uenoya 1979, Uenoya & Redwood 1978). The experimental work included openings with depths or diameters ranging from 0.34d to 0.63d and opening length-to-depth ratios of 1 and 2. The analyses covered openings with depths $\geq 0.3d$, and opening length-to-depth ratios ranging from 1 to 2.

Their recommendations are adopted in whole for steel members and relaxed slightly for composite sections to account for the portion of the shear carried by the concrete slab, $\overline{V}_c$. The higher limit on the opening parameter, $p_o$, of 6.0 for composite sections versus 5.6 for steel sections coin-

cides with successful tests (Donahey & Darwin 1988). Failure in composite sections is normally governed by failure of the concrete slab, and adequate strength has been obtained even when local buckling has been observed (Clawson & Darwin 1980, Clawson & Darwin 1982, Donahey & Darwin 1986). As discussed in section 5.6 (after Eq. 5-20), the limits on $p_o$ also serve to ensure that the design equations provide conservative predictions for member shear strength, even if web buckling is not a factor.

Limits on $V_m$ based on the web width-thickness ratio are used for both steel and composite sections. Somewhat more lenient criteria are applied to the composite sections. However, no detailed theoretical analyses have been made. The guidelines limiting the maximum values of $V_m$ can be quite conservative for sections with web width-thickness ratios below the maximum limits. Redwood & Uenoya (1979) provide guidance for members which lie outside the limits of this section.

*3. Buckling of tee-shaped compression zone*

For noncomposite members, a check must be made to ensure that buckling of the tee-shaped compression zone above or below an opening does not occur. This is of concern primarily for large openings in regions of high moment (Redwood & Shrivastava 1980). This need not be considered for composite members subject to positive bending.

*4. Lateral buckling*

The guidelines for openings in members subject to lateral buckling closely follow the recommendations of Redwood and Shrivastava (1980). They point out that openings have little effect on the lateral stability of W-shaped sections. However, design expressions have not been formulated to predict the inelastic lateral buckling capacity for a member with an opening, and to be safe, member strength should be governed by a point remote from the opening (Redwood & Shrivastava 1980).

Equation 3-26 is an extension of recommendations made by Redwood & Shrivastava (1980) and ASCE (1973) for use with the lateral buckling provisions of design specifications (AISC 1986b). Redwood and Shrivastava recommend the application of Eq. 3-26 only if the value of this expression is less than 0.90.

The increased load on the lateral bracing for unsymmetrically reinforced members is also recommended by Lupien and Redwood (1978).

**b. Other considerations**

*1. Opening and tee dimensions*

Opening dimensions are largely controlled by the limitations on $p_o$ and $a_o/h_o$ given in section 3.7a2. The limitations placed on the opening and tee dimensions in section 3.7bl are based on practical considerations. Opening depths in excess of 70 percent of the section depth are unrealistically large. The minimum depths of the tees are based on the need to transfer some load over the opening and a lack of test data for shallower tees. The limit of 12 on the aspect ratio of the tees ($\nu = a_o/s$) is based on a lack of data for members with greater aspect ratios.

*2. Corner radii*

The limitations on the corner radii of the opening are based on research by Frost and Leffler (1971), which indicates that corner radii meeting these requirements will not adversely affect the fatigue capacity of a member. In spite of this point, openings are not recommended for members that will be subjected to significant high cycle-low stress or low cycle-high stress fatigue loading.

*3. Concentrated loads*

Concentrated loads are not allowed over the opening because the design expressions are based on a constant value of shear through the openings and do not account for the local bending and shear that would be caused by a load on the top tee. A uniform load (standard roof or floor loads) will not cause a significant deviation from the behavior predicted by the equations. If a concentrated load must be placed over the opening, additional analyses are required to evaluate the response of the top tee and determine its effect on the strength of the member at the opening. The limitations on the locations of concentrated loads near openings to prevent web crippling are based on the criteria offered by Redwood & Shrivastava (1980). The requirements represent an extension of the criteria suggested by Redwood & Shrivastava (1980). These criteria are applied to composite and noncomposite members with and without reinforcement, although only limited data exists except for unreinforced openings in steel sections (Cato 1964). The requirement that openings be placed no closer than a distance $d$ to a support is to limit the horizontal shear stress that must be transferred by the web between the opening and the support.

*4. Circular openings*

The criteria for converting circular openings to equivalent rectangular openings for application with the design expressions are adopted from Redwood & Shrivastava (1980), which is based on an investigation by Redwood (1969) into the location of plastic hinges relative to the center line of openings in steel members. These conversions are adopted for composite beams as well. The use of $D_o$ for $h_o$ for both shear and bending in members with reinforced web openings is due to the fact that the reinforcement is adjacent to the opening. Treating the reinforcement as if it were adjacent to a shallower opening would provide an unconservative value for $V_m$.

5. *Reinforcement*

The requirements for reinforcement are designed to ensure that adequate strength is provided in the regions at the ends of the opening and that the reinforcement is adequately attached to develop the required strength. Equation 3-31 requires the weld to develop a strength of $R_{wr} = \phi 2P_r$ within the length of the opening. The factor 2 is used because the reinforcement is in tension at one end of the opening and in compression at the other end when the tee is subjected to shear (Figs. 5.13 and 5.15). Within the extensions, reinforcement must be anchored to provide the full yield strength of the bars, since the expressions for $M_m$ are based on this assumption. This requires (1) an extension length $\ell_1 \geq \sqrt{3}A_r/(2t_w)$, based on the shear strength of the web and (2) a weld capacity of $F_yA_r$ (see Eq. 3-32). The limit on $\ell_1 = a_o/4$ allows a single size fillet weld to be used on one side of the bar within the length of the opening and on both sides of the bar in the extensions.

The terms $2P_r$ in Eq. 3-31 and $F_yA_r$ in Eq. 3-32 are multiplied by $\phi$ (0.90 for steel beams and 0.85 for composite beams) to convert these forces into equivalent factored loads. The weld is then designed to resist the factored load, $R_{wr}$, with a value of $\phi = 0.75$ (AISC 1986b). The result is a design which is consistent with AISC (1986b).

The criteria for placing the reinforcement on one side of the web are based on the results of research by Lupien and Redwood (1978). The criteria are designed to limit reductions in strength caused by out of plane deflections caused by eccentric loading of the reinforcement. The limitations on the area of the reinforcement, $A_r$, in Eq. 3-33 and aspect ratio of the opening, $a_o/h_o$, in Eq. 3-34 represent the extreme values tested by Lupien and Redwood. The limitation on the tee slenderness, $s/t_w$, in Eq. 3-35 is primarily empirical. The limitation on $M_u/(V_ud)$ in Eq. 3-36 restricts the use of unsymmetrical reinforcement to regions subject to some shear. For regions subjected to pure bending or very low shear, the out of plane deflections of the web can be severe. Under shear, the lateral deformation mode caused by the unsymmetrical reinforcement changes to allow a greater capacity to be developed. Additional guidance is given by Lupien & Redwood (1978) for the use of unsymmetrical reinforcement in regions of pure bending or very low shear.

The criteria are adopted for composite as well as steel beams.

6. *Spacing of openings*

Equations 3-37a through 3-38b are designed to ensure that openings are spaced far enough apart so that design expressions for individual openings may be used (Redwood & Shrivastava 1980). Specifically, the criteria are meant to ensure that a plastic mechanism involving interaction between openings will not develop, instability of the web posts between openings will not occur, and web posts between openings will not yield in shear.

The additional requirements for composite members in Eqs. 3-39a and b are based on observations by Donahey and Darwin (1986, 1988) of slab bridging in members with single openings. The expressions are designed to limit the potential problem of slab bridging between adjacent openings, although no composite beams with multiple openings have been tested.

### c. Additional criteria for composite beams

1. *Slab reinforcement*

Slabs tend to crack both transversely and longitudinally in the vicinity of web openings. Additional slab reinforcement is needed in the vicinity of the openings to limit the crack widths and improve the post-crack strength of the slab. The recommendations are based on observations by Donahey and Darwin (1986, 1988).

2. *Shear connectors*

Donahey and Darwin (1986, 1988) observed significant bridging (lifting of the slab from the steel section) from the low moment end of the opening past the high moment end of the opening in the direction of increasing moment. The studs in the direction of increasing moment are designed to help limit bridging, although the studs do not enter directly into the calculation of member strength at the opening. The minimum of two studs per foot is applied to the total number of studs. If this criterion is already satisfied by normal stud requirements, additional studs are not needed.

3. *Construction loads*

This requirement recognizes that a composite beam with adequate strength at a web opening may not provide adequate capacity during construction, when it must perform as a non-composite member.

## 5.8 ALLOWABLE STRESS DESIGN

The design of web openings in beams that are proportioned using Allowable Stress Design must be based on strength because the load at which yielding begins at web openings is not a uniform measure of strength. Conservatively and for convenience, a single load factor, 1.7, is used for dead and live loads and a single $\phi$ factor, 1.00, is used for both steel and composite construction.

# Chapter 6
# DEFLECTIONS

## 6.1 GENERAL

A web opening may have a significant effect on the deflections of a beam. In most cases, however, the influence of a single web opening is small.

The added deflection caused by a web opening depends on its size, shape, and location. Circular openings have less effect on deflection than rectangular openings. The larger the opening and the closer the opening is to a support, the greater will be the increase in deflection caused by the opening. The greatest deflection through the opening itself will occur when the opening is located in a region of high shear. Rectangular openings with a depth, $h_o$, up to 50 percent of the beam depth, $d$, and circular openings with a diameter, $D_o$, up to 60 percent of $d_o$, cause very little additional deflection (Donahey 1987, Redwood 1983). Multiple openings can produce a pronounced increase in deflection.

As a general rule, the increase in deflection caused by a single large rectangular web opening is of the same order of magnitude as the deflection caused by shear in the same beam without an opening. Like shear deflection, the shorter the beam, the greater the deflection caused by the opening relative to the deflection caused by flexure.

## 6.2 DESIGN APPROACHES

Web openings increase deflection by lowering the moment of inertia at the opening, eliminating strain compatibility between the material in the top and bottom tees, and reducing the total amount of material available to transfer shear (Donahey 1987, Donahey & Darwin 1986). The reduction in gross moment of inertia increases the curvature at openings, while the elimination of strain capability and reduction in material to transfer shear increase the differential, or Vierendeel, deflection across the opening. The Vierendeel deformation is usually of greater concern than is the local increase in curvature.

A number of procedures have been developed to calculate deflections for flexural members with web openings. Three procedures specifically address steel beams (Dougherty 1980, McCormick 1972a, ASCE 1973), and one method covers composite members (Donahey 1987, Donahey & Darwin 1986). The first three procedures calculate deflections due to the web opening that are added to the deflection of the beam without an opening. The method developed for composite members, which can also be used for steel beams, calculates total deflections of members with web openings. Three of these methods will now be briefly described.

Rev. 3/1/03

## 6.3 APPROXIMATE PROCEDURE

The Subcommittee on Beams with Web Openings of the Task Committee on Flexural Members of the Structural Division of ASCE (1971) developed an approximate procedure that represents the portion of the beam from the low moment end of the opening to the far end of the beam as a hinged, propped cantilever (Fig. 6.1). The method was developed for beams with concentric openings. The shear at the opening, $V$, is evenly distributed between the top and bottom tees. The deflection through the opening, $\Delta_o$, is

Rev. 3/1/03

$$\Delta_o = \frac{V a_o^3}{6EI_T} \tag{6-1}$$

in which

$a_o$ = length of opening

$E$ = modulus of elasticity of steel

$I_T$ = moment of inertia of tee

The additional deflection, $\Delta_{p_1}$, at any point between the high moment end of the opening and the support caused by the opening (Fig. 6.1) is expressed as

$$\Delta_{p_1} = \Delta_o \frac{l_2}{l_o} \tag{6-2}$$

in which

$l_o$ = distance from high moment end of opening to adjacent support (Fig. 6.1)

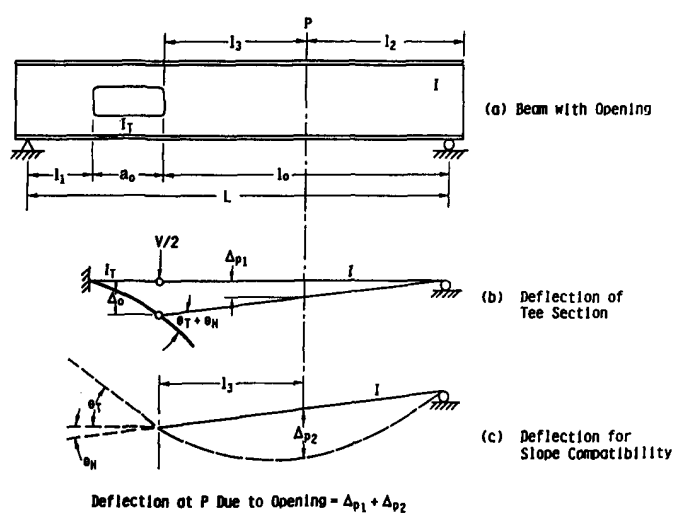


*Fig. 6.1. Deflections due to web opening—approximate approach (ASCE 1971).*

Rev. 3/1/03

$l_2$ = distance from support to point at which deflection is calculated (Fig 6.1)

To enforce slope continuity at the high moment end of the opening, an additional component of deflection, $\Delta_{p_2}$, is obtained.

$$\Delta_{p_2} = \frac{2(\theta_H + \theta_T)l_2 l_3}{l_o + l_2} \tag{6-3}$$

in which

$$\theta_H = \frac{\Delta_o}{l_o}$$

Rev. 3/1/03

$$\theta_T = \frac{Va_o^2}{4EI_T}$$

$$l_3 = l_o - l_2$$

The sum of the displacements calculated in Eqs. 6-2 and 6-3, $\Delta_{p_1} + \Delta_{p_2}$, is added to the deflection obtained for the beam without an opening. The procedure does not consider the deflection from the low moment end of the opening to the adjacent support, slope compatibility at the low moment end of the opening, axial deformation of the tees, or shear deformation in the beam or through the opening. The subcommittee reported that the procedure is conservative.

McCormick (1972b) pointed out that the subcommittee procedure is conservative because of a lack of consideration of compatibility between the axial deformation of the tees and the rest of the beam. He proposed an alternate procedure in which points of contraflexure are assumed at the center line of the opening (McCormick 1972a). Bending and shear deformation of the tees are included but compatibility at the ends of an opening is not enforced. McCormick made no comparison with experimental results.

## 6.4 IMPROVED PROCEDURE

Dougherty (1980) developed a method in which the deflection due to Vierendeel action at a web opening is obtained (Fig. 6.2). The calculations take into account deformations due to both secondary bending and shear in the tee sections above and below the opening and slope compatibility at the ends of the opening. The increased curvature under primary bending due to the locally reduced moment of inertia at the opening is not included. Shear is assigned to the tees in proportion to their relative stiffnesses, which take into account both flexural and shear deformation.

As shown in Fig. 6.2, $\Delta_o$, $\theta_1$, $\theta_2$ fully define the deflection throughout a beam due to deflection through the opening. The total deflection through a concentric opening $\Delta_o$ is

$$\Delta_o = \Delta_{ob} + \Delta_{os} + \frac{L}{2}(\theta_1 - \theta_2) \tag{6-4}$$

in which

$$\Delta_{ob} = \frac{Va_o^3}{24EI_T} \tag{6-5}$$

$$\Delta_{os} = \frac{KVa_o}{2GA_T} \tag{6-6}$$

$$\theta_1 = \frac{Va_o^2[2I_T(2l_o + a_o) + I_o(2l_o - a_o)]}{48EI_oI_TL} + \frac{\Delta_{os}(2l_o + a_o)}{2Ll_o} \tag{6-7}$$

$$\theta_2 = \frac{Va_o^2[2I_T(2l_1 + a_o) + I_o(2l_1 + 3a_o)]}{48EI_oI_TL} + \frac{\Delta_{os}(2l_1 + a_o)}{2Ll_o} \tag{6-8}$$

$V$ = shear at opening center line
$G$ = shear modulus = $E/2(1 + \nu)$
$\nu$ = Poisson's ratio
$K$ = shape factor (Knostman et al. 1977)
$A_T$ = area of tee
$I_o$ = moment of inertia of perforated beam
$L$ = length of beam
$l_o$ = distance from high moment end of opening to adjacent support (Fig. 6.2)
$l_1$ = distance from low moment end of opening to adjacent support (Fig. 6.2)

Rev. 3/1/03

The reader is referred to Dogherty (1980) for the case of eccentric openings.

The procedure can, in principle, be used to calculate deflection due to an opening in a composite beam as well as a steel beam. In that case, based on the work of Donahey and Darwin (1986, 1987) described in the next section, the moment of inertia of the top tee should be based on the steel tee only, but $I_o$ should be based on the composite section at the opening.

Rev. 3/1/03

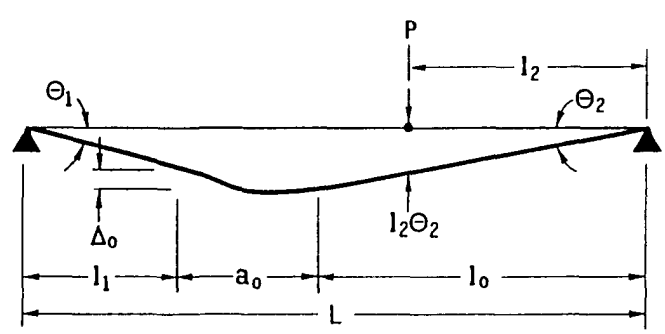


*Fig. 6.2. Deflections due to web opening—improved procedure (Dougherty 1980).*

Rev. 3/1/03

## 6.5 MATRIX ANALYSIS

Donahey and Darwin (1987, 1986) developed a procedure to obtain the total deflection of composite beams with web openings that utilizes matrix analysis techniques. The procedure is applicable to noncomposite as well as composite construction. The beam is represented as illustrated in Fig. 6.3. The nonperforated portions of a beam, sections 1, 4, and 5 in Fig. 6.3, are represented in matrix analysis in the normal manner. The sections above and below the opening are represented using the properties of the individual tees, including local eccentricities of the centroid of the tees with respect to the centroid of the nonperforated section, $\ell_t$ and $\ell_b$. The top and bottom tees are modeled by considering the moments of inertia of the *steel sections alone* for local bending through the opening, the area of the steel webs for carrying shear, and the gross transformed area of the cross section for axial deformation.

Based on an analysis of test data, Donahey and Darwin (1986) concluded that for the beams tested (lengths were 22 ft or less), the effect of shear deformation must be included to obtain an accurate prediction of maximum deflection.

The model, as described above, including the eccentricities $\ell_t$ and $\ell_b$, can be easily included in most general-purpose finite element programs. For less general programs that do not have the capability to handle element eccentricities, the individual element stiffnesses, including eccentricity, can be easily incorporated in a single element stiffness matrix, *[K]*, which relates global forces and displacements, $\{P\}$ and $\{U\}$.

$$\{P\} = [K]\ \{U\} \tag{6-9}$$

in which

$$\{P\}^T = \lfloor F_{x_1},\ F_{y_1},\ M_1,\ F_{x_2},\ F_{y_1},\ M_2 \rfloor \tag{6-10}$$

$$\{U\}^T = \lfloor u_1,\ v_1,\ \theta_1,\ u_2,\ v_2,\ \theta_2 \rfloor \tag{6-11}$$

$$[K] = \frac{E}{a_o} \begin{bmatrix} K_{11} & K_{12} & K_{13} & K_{14} & K_{15} & K_{16} \\ & K_{22} & K_{23} & K_{24} & K_{25} & K_{26} \\ & & K_{33} & K_{34} & K_{35} & K_{36} \\ & & & K_{44} & K_{45} & K_{46} \\ & \text{SYM.} & & & K_{55} & K_{56} \\ & & & & & K_{66} \end{bmatrix} \tag{6-12}$$

in which

$$K_{11} = K_{44} = -K_{14} = (A_b + A_t)$$

$$K_{12} = K_{15} = K_{24} = K_{45} = 0$$

$$K_{13} = K_{46} = -K_{16} = -K_{34} = (\ell_b A_b - \ell_t A_t)$$

$$K_{22} = K_{55} = -K_{25} = (\beta_b + \beta_t)$$

$$K_{23} = K_{26} = -K_{35} = -K_{56} = \frac{a_o}{2}(\beta_b + \beta_t)$$

$$K_{33} = K_{66} = \ell_t^2 A_t + \ell_b^2 A_b + \beta_t\left(\frac{a_o^2}{3} + n_t\right) + \beta_b\left(\frac{a_o^2}{3} + n_b\right)$$

$$K_{36} = -\ell_t^2 A_t - \ell_b^2 A_b + \beta_t\left(\frac{a_o^2}{6} + n_t\right) + \beta_b\left(\frac{a_o^2}{6} + n_b\right)$$

$\beta = I/(a_o^2/12 + n)$

$n = EI/(A_y G)$

$A_y$ = effective shear area

$A$ = gross transformed area for axial deformation

$I$ = moment of inertia steel tee only.

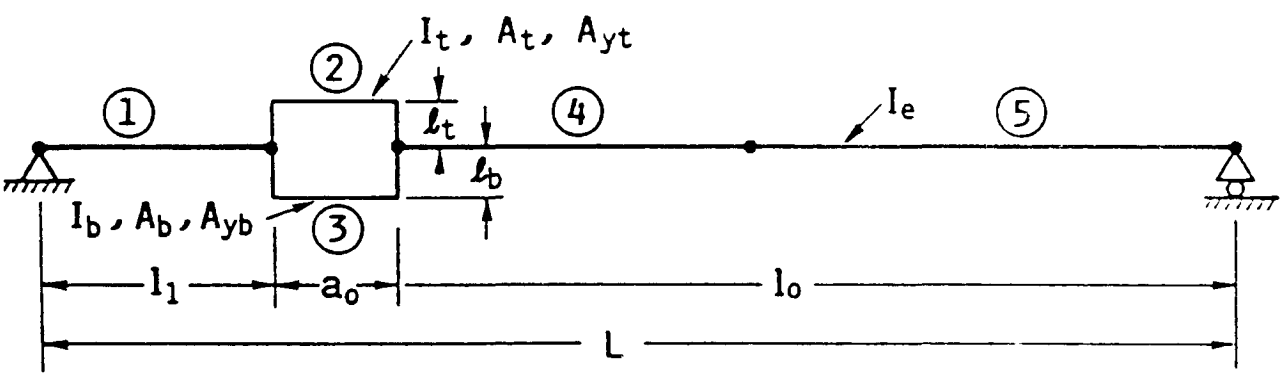


Fig. 6.3. *Model of beam with web opening for use with matrix analysis (Donahey 1987, Donahey & Darwin 1986).*

$\ell$ = distance from center of gravity of unperforated beam to center of gravity of a tee section.

Subscripts *"t"* and *"b"* indicate the top and bottom tees, respectively.

This model gives generally accurate and conservative results for maximum deflection in composite beams with web openings and somewhat less accurate, but generally conservative, predictions for local deflections through web openings (Donahey & Darwin 1986). The lack of composite behavior for local bending through the web opening, as represented by the use of the moment of inertia of the steel tee section only for the top tee, takes into account the large slip that occurs between the concrete and steel at web openings.

Using this model, Donahey (1987) carried out a parametric study considering the effects of slab thickness relative to beam size, opening depth-to-beam depth ratio, opening length-to-depth ratio, and opening location. A total of 108 beam configurations were investigated. Based on this study, Donahey concluded that the ratio of the midspan deflections for beams with and without an opening, *r*, could be adequately represented as

$$r_\Delta = \frac{\Delta_m}{\Delta_b + \Delta_s} = 1.00 + 0.00325 \left(\frac{I_e}{I_t + I_b}\right)\frac{a_o}{L} \quad (6\text{–}13)$$

in which

$\Delta$ = maximum deflection of a beam with an opening due to bending and shear

$\Delta_b$ = maximum deflection due to bending of a beam without an opening

$\Delta_s$ = maximum deflection due to shear of a beam without an opening

$= \dfrac{wL^2}{8A_yG}$ for a symmetrical, uniformly loaded beam

$I_e$ = moment of inertia of unperforated steel beam or effective moment of inertia of unperforated composite beam

Donahey's analysis indicates that for the largest openings evaluated ($h_o/d = 0.6$, and $a_o/h_o = 2.0$), the deflection due to the opening is approximately equal to the deflection due to shear. For smaller openings ($h_o/d = 0.5$ and $a_o/h_o = 2.0$ and smaller), openings increased deflection by less than 4 percent.

# REFERENCES


Aglan, Ahmed A., and Samih Qaquish, "Plastic Behavior of Beams with Mid-Depth Web Openings," AISC *Engineering Journal* 19:No.l (1982): 20-26.

____, and Richard G. Redwood, "Web Buckling in Castellated Beams," *Proceedings,* Part 2, Institution of Civil Engineering (London), 57 (June 1974): 307-20.

American Institute of Steel Construction, *Load and Resistance Factor Design Manual of Steel Construction* (Chicago: AISC, 1986a).

____, *Load and Resistance Factor Design Specification for Structural Steel Buildings* (Chicago: AISC, 1986b).

____, *Specification for the Design, Fabrication and Erection of Structural Steel for Buildings* (Chicago: AISC, 1978).

American Society of Civil Engineers, "Suggested Design Guides for Beams with Web Holes," by the Subcommittee on Beams with Web Openings of the Task Committee on Flexure Members of the Structural Division, John E. Bower, Chmn., ASCE *Journal of the Structural Division* 97:No.STll (November 1971: 2707-28; Closure to Discussion, 99:No.St.6 (June 1973): 1312-15.

Bower, John E., "Ultimate Strength of Beams with Rectangular Holes," ASCE *Journal of the Structural Division* 94:No.ST6 (June 1968): 1315-37.

Cato, S. L., Web Buckling Failure of Built-Up Girders with Rectangular Holes, Master's Degree thesis, Oregon State University, Corvallis, Oregon, 1964.

Cho Soon, "An Investigation on the Strength of Composite Beams with Web Openings," M.S. Arch. Eng. Thesis, Hanyong University, Seoul, Korea, December 1982.

____, and Richard G. Redwood, "The Design of Composite Beams with Web Openings," *Structural Engineering Series No. 86-2* (Montreal: McGill University, June 1986).

Clawson, William C., and David Darwin, "The Design of Composite Beams with Web Openings," *Structural Engineering and Engineering Materials SM Report* No. 4, Lawrence, Kas.: University of Kansas, October 1980.

Rev. 3/1/03

Clawson, William C., and Darwin, David, "Tests of Composite Beams with Web Openings", ASCE *Journal of the Structural Division* 108:No.ST1 (January 1982a): 145-62.

Clawson, William C., and Darwin, David "Strength of Composite Beams with Web Openings", ASCE *Journal of the Structural Division* 108: No.ST3 (March 1982b): 623-41.

Congdon, Judith, and Richard G. Redwood, "Plastic Behavior of Beams with Reinforced Holes," ASCE *Journal of the Structural Division* 96:No.ST9 (September 1970): 1933-55.

Cooper, Peter B., and Robert R. Snell, "Tests on Beams with Reinforced Web Openings," ASCE *Journal of the Structural Division* 98:No.ST3 (March 1972): 611-32.

____, Robert R. Snell, and Harry D. Knostman, "Failure Tests on Beams with Eccentric Web Holes, ASCE *Journal of the Structural Division* 103:No.ST9 (September 1977): 1731-37.

Darwin, David, "Composite Beams with Web Openings," *Proceedings,* National Engineering Conference, American Institute of Steel Construction, Chicago, March 1984; also ASCE *Journal of the Boston Society of Civil Engineers Section* 71:Nos.1&2 (1985): 67-83.

____, "Behavior and Design of Composite Beams with Web Openings," chapt. 3 in *Steel-Concrete Composite Structures: Stability and Strength,* R. Narayanan, ed. (London and New York: Applied Science Publishers, 1988): 53-78.

____, and Rex C. Donahey, "LFRD for Composite Beams with Unreinforced Web Openings," ASCE *Journal of Structural Engineering* 114:No.3 (March 1988): 535-52.

Donahey, Rex C., "Deflections of Composite Beams with Web Openings," *Building Structures, Proceedings,* ASCE Structures Congress, D. R. Sherman, ed., Orlando, Flroida, August 1987: 404-17.

____, and David Darwin, "Performance and Design of Composite Beams with Web Openings," *Structural Engineering and Engineering Materials SM Report No. 18,* University of Kansas Center for Research, Lawrence, Kansas, 1986.

Donoghue, C. Michael, "Composite Beams with Web Openings, Design," ASCE *Journal of the Structural Division* 108:No.ST12 (December 1982): 2652-67.

Dougherty, Brian K., "Elastic Deformation of Beams with Web Openings," ASCE *Journal of the Structural Division* 106:No.STl (January 1980): 301-12.

____, "Buckling of Web Posts in Perforated Beams," ASCE *Journal of the Structural Division* 107:No.ST3 (March 1981): 507-19.

Ellingwood, Bruce, Theodore V. Galambos, James G. MacGregor, and C. Allin Cornell, *Development of a Probability-Based Load Criterion for American National Standard A58-Building Code Requirements for Minimum Design Loads in Buildings and Other Structures* (Washington, D.C.: National Bureau of Standards, June 1980).

Frost, Ronald W, and Robert E. Leffler, "Fatigue Tests of Beams with Rectangular Web Holes," ASCE *Journal of the Structural Division* 97:No.ST2 (February 1971): 509-27.

Galambos, Theodore V., "Proposed Criteria for Load and Resistance Factor Design of Steel Building Structures," *Steel Research for Construction Bulletin No. 27* (Washington, D.C.: American Iron and Steel Institute, January 1978).

____, and Mayasandra K. Ravindra, "Tentative Load and Resistance Factor Design Criteria for Steel Buildings,"

Donahey, Rex C., and Darwin, David, "Web Openings in Composite Beams with Ribbed Slabs", ASCE *Journal of Structural Engineering* 114:No.3 (March 1988): 518-534.

Rev. 3/1/03

*Research Report No. 18* (St. Louis: Washington University, Civil Engineering Department, September 1973).

____, "Load and Resistance Factor Design Criteria for Composite Beams," *Research Report No. 44* (St. Louis: Washington University, Civil Engineering Department, April 1976).

Granade, Charles J., "An Investigation of Compostie Beams Having Large Rectangular Openings in Their Webs," Master's thesis, University of Alabama, at University, Alabama, 1968.

Hansell, William C, Theodore V. Galambos, Mayasandra K. Ravindra, and Ivan M. Viest, "Composite Beam Criteria in LRFD," ASCE *Journal of the Structural Division* 104: No.ST9 (September 1978): 1409-26.

Knostman, Harry D., Peter B. Cooper, and Robert R. Snell, "Shear Force Distribution at Eccentric Web Openings," ASCE *Journal of the Structural Division* 103: No. ST6, (June 1977): 1216-21.

Kussman, Richard L., and Peter B. Cooper, "Design Example for Beams with Web Openings," AISC *Engineering Journal* 13:No.2 (1976): 48-56.

Lucas, Warren K., and David Darwin, "Steel and Composite Beams with Web Openings," *Report* (Lawrence, Kas.: University of Kansas Center for Research, 1990).

Lupien, Roger, and Richard G. Redwood, "Steel Beams with Web Openings Reinforced on One Side " *Canadian Journal of Civil Engineering 5* :No.4 (December 1978): 451-61.

McCormick, Michael M., "Open Web Beams—Behavior, Analysis, and Design," *BMP Report, MRL17/18* (Clayton, Victoria, Australia: Melbourne Research Laboratories, The Broken Hill Proprietary Company Limited, 1972a).

____, Discussion of "Suggested Design Guides for Beams with Web Holes," ASCE *Journal of the Structural Division* 98:No.ST12 (December 1972b): 2814-16.

Poumbouras, George, "Modification of a Theory Predicting the Shear Strength of Composite Beams with Large Web Openings," *Project Report No. U83-20* (Montreal: McGill University, Department of Civil Engineering and Applied Mechanics, April 1983).

Redwood, Richard G., "Plastic Behavior and Design of Beams with Web Openings," *Proceedings,* First Canadian Structural Engineering Conference (Toronto: Canadian Steel Industries Construction Council, February 1968a): 127-38.

_____, "Ultimate Strength of Beams with Multiple Openings," *Preprint No. 757,* ASCE Structural Engineering Conference, Pittsburgh, October 1968b.

____, "The Strength of Steel Beams with Unreinforced Web Holes," *Civil Engineering and Public Works Review* (London), 64:No.755 (June 1969): 559-62.

_____, "Simplified Plastic Analysis for Reinforced Web Holes," AISC *Engineering Journal* 8:No.3 (1971): 128-31.

_____, "Design of I-Beams with Web Perforations," chapt. 4 in *Beams and Beam Columns: Stability and Strength,* R. Narayanan, ed. (London and New York: Applied Science Publishers, 1983): 95-133.

____, "The Design of Composite Beams with Web Openings," *Proceedings,* First Pacific Structural Steel Conference, Aukland, New Zealand 1 (August 1986): 169-85.

____, Hernan Baranda, and Michael J. Daly, "Tests of Thin-Webbed Beams with Unreinforced Holes," ASCE *Journal of the Structural Division* 104:No.ST3 (March 1978): 577-95.

____, and John O. McCutcheon, "Beam Tests with Unreinforced Web Openings," ASCE *Journal of the Structural Division* 94:No.STl (January 1968): 1-17.

____, and George Poumbouras, "Tests of Composite Beams with Web Holes," *Canadian Journal of Civil Engineering* 10:No.4 (December 1983): 713-21.

____, and George Poumbouras, "Analysis of Composite Beams with Web Openings," ASCE *Journal of Structural Engineering* 110:No.ST9 (September 1984): 1949-58.

____, and Suresh C. Shrivastava, "Design Recommendations for Steel Beams with Web Holes," *Canadian Journal of Civil Engineering* 7:No.4 (December 1980): 642-50.

____, and Minoru Uenoya, "Critical Loads for Webs with Holes," ASCE *Journal of the Structural Division* 105:No.ST10 (October 1979): 2053-76.

____, and Patrick K. Wong, "Web Holes in Composite Beams with Steel Deck," *Proceedings, Eighth Canadian Structural Engineering Conference* (Willowdale, Ontario: Canadian Steel Construction Council, February 1982).

Todd, David M., and Peter B. Cooper, "Strength of Composite Beams with Web Openings," ASCE *Journal of the Structural Division* 106:No.ST2 (February 1980): 431-44.

Uenoya, Minoru, and Richard G. Redwood, "Buckling of Webs with Openings," *Computers and Structures* 9:No.2 (1978): 191-99.

U.S. Steel Corp., *Rectangular, Concentric and Eccentric Reinforced Web Penetrations in Steel Beams—A Design Aid,* rev. ed., ADUSS 27-8482-02 (Pittsburgh, Penn.: U.S. Steel Corp., April 1986).

____, *Rectangular, Concentric and Eccentric Unreinforced Web Penetrations in Composite Steel Beam—A Design Aid,* ADUSS 27-8482-01 (Pittsburgh, Penn.: U.S. Steel Corp., October 1984).

____, *Rectangular, Concentric and Eccentric Unreinforced Web Penetrations in Steel Beams—A Design Aid,* ADUSS 27-7108-01 (Pittsburgh, Penn.: U.S. Steel Corp., June 1981).

Wang, Tsong-Miin, Robert R. Snell, and Peter B. Cooper, "Strength of Beams with Eccentric Reinforced Holes," ASCE *Journal of the Structural Division* 101:No.ST9 (September 1975): 1783-99.

Wiss, Janney, Elstner Associates, *Structural Investigation of a Typical Floor Beam at the 200 West Adams Building, Chicago,* WJE No. 840795 (Northbrook, 111.: W.J.E. Assoc., Inc., August 1984).

# ADDITIONAL BIBLIOGRAPHY


Aglan, Ahmed A., and Richard G. Redwood, "Elastic and Inelastic Instability of Webs Between Holes," *Structural Mechanics Series,* No. 73-5 (Quebec, Canada: McGill University, 1973).

Bower, John E., "Elastic Stresses Around Holes in Wide-Flange Beams," ASCE *Journal of the Structural Division* 92:No.ST2 (April 1966): 85-101.

____, "Experimental Stresses in Wide-Flange Beams with Holes," ASCE *Journal of the Structural Division* 92:No.ST5 (October 1966): 167-86.

____, "Design of Beams with Web Openings," ASCE *Journal of the Structural Division,* 94:No.ST3 (March 1968): 783-807.

Brock, J. S., "The Stresses Around Square Holes with Rounded Corners," *Journal of Ship Research* 2:No.2 (1958):37-41.

Brockenbrough, Roger L., "Design Aids for Beams with Eccentric-Unreinforced-Rectangular Web Holes," *Research Bulletin* (Pittsburgh, Penn.: U.S. Steel Corp., 22 October, 1980).

____, "Ultimate-Strength Tables for Beams with Eccentric-Unreinforced-Rectangular Web Holes," *Research Bulletin* (Pittsburgh, Penn.: U.S. Steel Corp., 10 November 1976).

____, "Design Aids for Beams with Composite Beams with Unreinforced-Rectangular Web Holes," *Research Bulletin* (Pittsburgh, Penn., U.S. Steel Corp., 7 July 1983).

Chan, Peter W., "Approximate Methods to Calculate Stresses Around Circular Holes," *Fourth Progress Report to Canadian Steel Industries Construction Council,* Project 695, November 1971.

____, and Richard G. Redwood, "Stresses in Beams with Circular Eccentric Web Holes," ASCE *Journal of the Structural Division* 100:No.ST.l (January 1974): 231-48.

Darwin, David, "Web Openings in Composite Bams," *Composite Construction in Steel and Concrete,* C. D. Buckner and I. M. Viest, eds. (New York: American Society of Civil Engineers, 1988): 270-85.

Deresiewicz, Herbert, "Stresses in Beams Having Holes of Arbitrary Shape," ASCE *Journal of the Engineering Mechanics Division* 94:No.EM5 (October 1968): 1183-1214.

Douglas, Terry R., and Samuel C. Gambrell, "Design of Beams with Off-Center Web Openings," ASCE *Journal of the Structural Division* 100:No.ST6 (June 1974): 1189-1203.

Frost, Ronald W., "Behavior of Steel Beams with Eccentric Web Holes, *Technical Report* 46.019-400 (Monroeville, Penn.: U.S. Steel Corp., Applied Research Laboratory, February 1973).

Gibson, J. E., and W. M. Jenkins, "The Stress Distribution in a Simply Supported Beam with Circular Holes," *Structural Engineer* (London) 34:No.l2 (December 1956): 443-49.

Gotoh, K., "The Stresses in Wide-Flange Beams with Web Holes," *Theoretical and Applied Mechanics* (University of Tokyo Press) 23 (1975): 223-42.

Halleux, Pierre, "Limit Analysis of Castellated Steel Beams," *Acier Stahl Steel* No. 3 (March 1967): 133-44.

Heller, S. R., "The Stresses Around a Small Opening in a Beam Subjected to Bending with Shear," *Proceedings,* 1st U.S. National Congress of Applied Mechanics (Chicago: ASME, 1951): 239-45.

____, "Reinforced Circular Holes in Bending with Shear," *Journal of Applied Mechanics* 20 (June 1953): 279-85.

_____, J. S. Brock, and R. Bart, "The Stresses Around a Rectangular Opening with Rounded Corners in a Uniformly Loaded Plate," *Proceedings,* 3rd U.S. National Congress of Applied Mechanics (ASME, 1958): 357-68.

____, J. S. Brock, and R. Bart, "The Stresses Around a Rectangular Opening with Rounded Corners in a Beam Subjected to Bending with Shear," *Proceedings,* 4th U.S. National Congress of Applied Mechanics (ASME, Vol. 1, 1962): 489-96.

Hoglund, T., "Strength of Thin Plate Girders with Circular or Rectangular Web Holes Without Web Stiffeners," *Reports of the Working Commissions* (IABSE Colloquium, London, Vol. 11, 1971): 353-65.

Kussman, Richard L., "Ultimate Load Tests on Steel Beams with Reinforced Eccentric Web Openings," M.S. Thesis, Kansas State University, Manhattan, Kansas, 1975.

____, and Peter B. Cooper, "Design Example for Beams with Web Openings," AISC *Engineering Journal* 13:No.2 (1976): 48-56.

Larsen, Marvin A., and Kirit N. Shah, "Plastic Design of Web Openings in Steel Beams," ASCE *Journal of the Structural Division* 102:No.ST5 (May 1976): 1031-41.

Lupien, Roger, "Web Openings in Steel Beams Reinforced on One Side," M. Eng. Thesis, McGill University, Montreal Quebec, Canada, 1977.

McLellan, T. J., "Effects of Openings in Webs of Steel Girders," paper presented at the Convention of the Structural Engineers Association of California, State Line, Nevada, October 1964.

McCutcheon, J. O., J. F. Dickie, and S. Y. Cheng, "Experimental Investigation of Large Extended Openings in the Webs of Wide-Flange Beams," *Applied Mechanics Series* No. 6 (Montreal: McGill University, April 1965).

____, W. C. So, and B. Gersovitz, "A Study of the Effects of Large Circular Openings in the Webs of Wide-Flange Beams, *Applied Mechanics Series* No. 2 (Montreal: McGill University, November 1963).

Narayanan, R., and K. C. Rockey, "Ultimate Load Capacity of Plate Girders with Webs Containing Circular Cut-Outs," *Proceedings,* Part 2 (London: Institution of Civil Engineers, Vol. 71, 1981): 845-62.

Porbandarwalla, A. G., "Ultimate Load Capacity of Steel Beams with Web Openings by the Finite Element Method," M.S. Thesis, Kansas State University, Manhattan, Kansas, 1975.

Redwood, Richard G., "Stresses in Webs with Circular Openings," *Final Report to the Canadian Steel Industries Construction Council,* Research Project No. 695 (December 1971).

____, "Tables for Plastic Design of Beams with Rectangular Holes," AISC *Engineering Journal* 9:No.l (1972): 2-19.

____, *Design of Beams with Web Holes* (Canadian Steel Industries Construction Council, 1973).

____, and Peter W. Chan, "Design Aids for Beams with Circular Eccentric Web Holes," ASCE *Journal of the Structural Division* 100:No.ST2 (February 1974): 297-303.

Rockey, K. S., R. G. Anderson, and Y. K. Cheung, "The Behaviour of Square Shear Webs Having a Circular Hole," *Thin Walled Steel Structure,* edited by K. C. Rockey and H. V. Hill (London: Crosby Lockwood, 1969): 148-72.

Segner, Edmund P., "Reinforcement Requirements for Girder Web Openings," ASCE *Journal of the Structural Division* 90:No.ST3 (June 1964): 147-64.

Sherbourne, A. N., and J. Van Oostrom, "Plastic Analysis of Castellated Beams. I. Interaction of Moment, Shear, and Axial Force," *Computers and Structures* 2: No. 1/2 (February 1972): 79-109.

Shrivastava, Suresh C, and Richard G. Redwood, "Web Instability Near Reinforced Rectangular Holes," IABSE *Proceedings* No. P-6 (August 1977).

____, and Richard G. Redwood, "Shear Carried by Flanges at Unreinforced Web Holes," Technical Note, ASCE *Journal of the Structural Division* 105:No.ST8 (August 1979): 1706-11.

Swartz, Stuart E., and Krigo S. Eliufoo, "Composite Beams with Web Openings," ASCE *Journal of the Structural Division,* Technical Note, 106:No.ST5 (May 1980): 1203-1208.

Uenoya, M., and H. Ohmura, "Finite Element Method for Elastic Plastic Analysis of Beams with Holes," paper presented at Japan Society of Civil Engineers, National Meeting, Fukuoka, Japan, October 1972.

U.S. Steel Corp., *Design of Beams with Web Openings,* ADUSS 27-3500-01 (Pittsburgh, Penn.: U.S. Steel Corp., 1968).

____, *USS Building Design Data—Design of Beams with Web Openings,* ADUSS 27-3500-01 (Pittsburgh, Penn.: U.S. Steel Corp. (April 1968).

Van Oostrom, J., and A. N. Sherbourne, "Plastic Analysis of Castellated Beams. II. Analysis and Tests," *Computers and Structures* 2:No.1/2 (February 1972): 11-40.

Wang, Chi-Kia, "Theoretical Analysis of Perforated Shear Webs," ASME *Transactions* 13 (December 1946): A77-A84.

____, W. H. Thoman, and C. A. Hutchinson, "Stresses in Shear Webs Contiguous to Large Holes," *Internal Report* (Boulder, Colo.: University of Colorado, 1955).

Worley, W. J., "Inelastic Behavior of Aluminum Alloy I-Beams with Web Cutouts," *Bulletin* No. 44 (Urbana, Ill.: University of Illinois, Engineering Experiment Station, April 1958).

# APPENDIX A

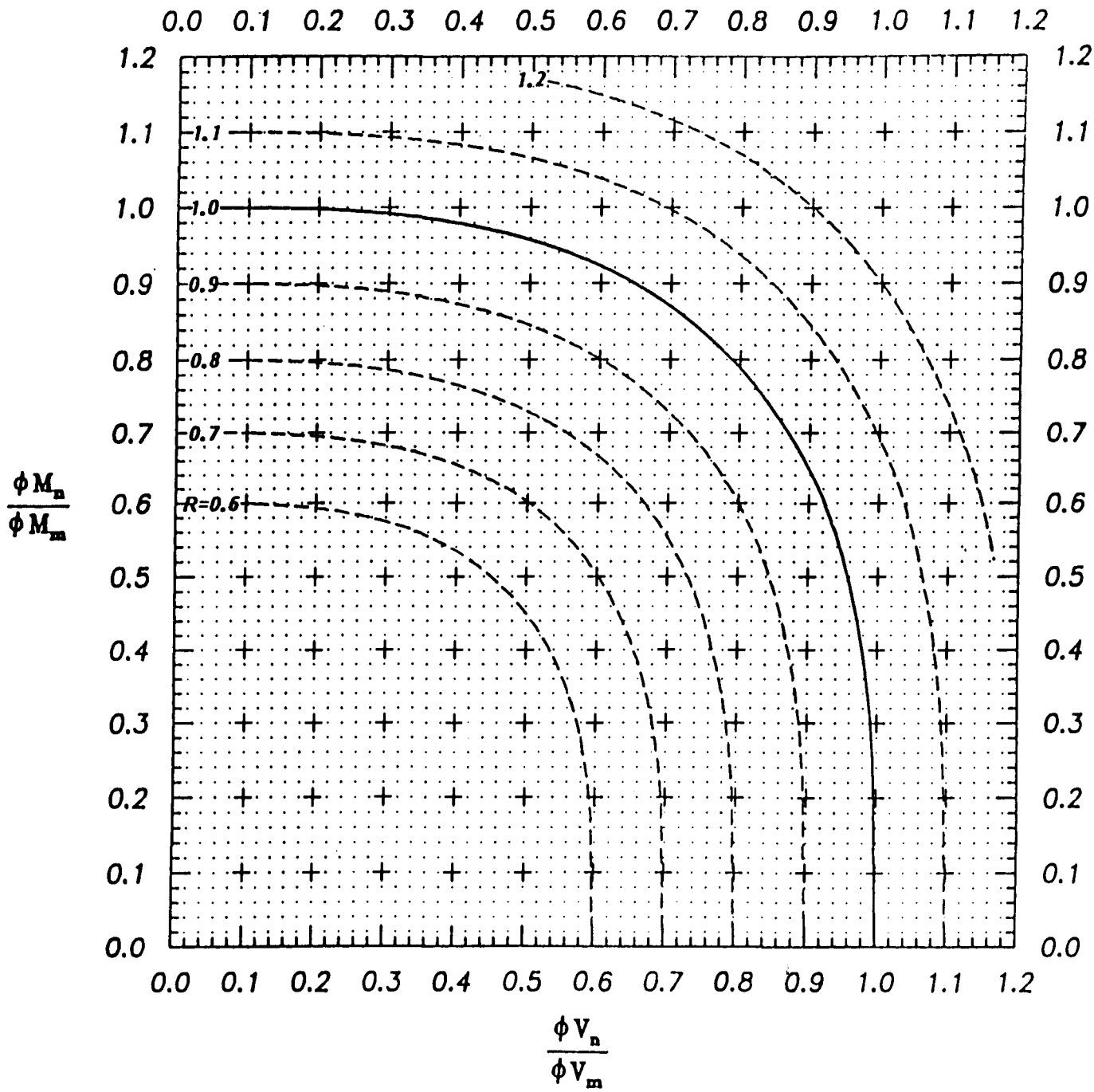


*Fig. A.I. Moment-shear interaction curves.* $R = V_u/\phi V_n = M_u/\phi M_n$; $\phi = 0.90$ *for steel beams;* $\phi = 0.85$ *for composite beams.*

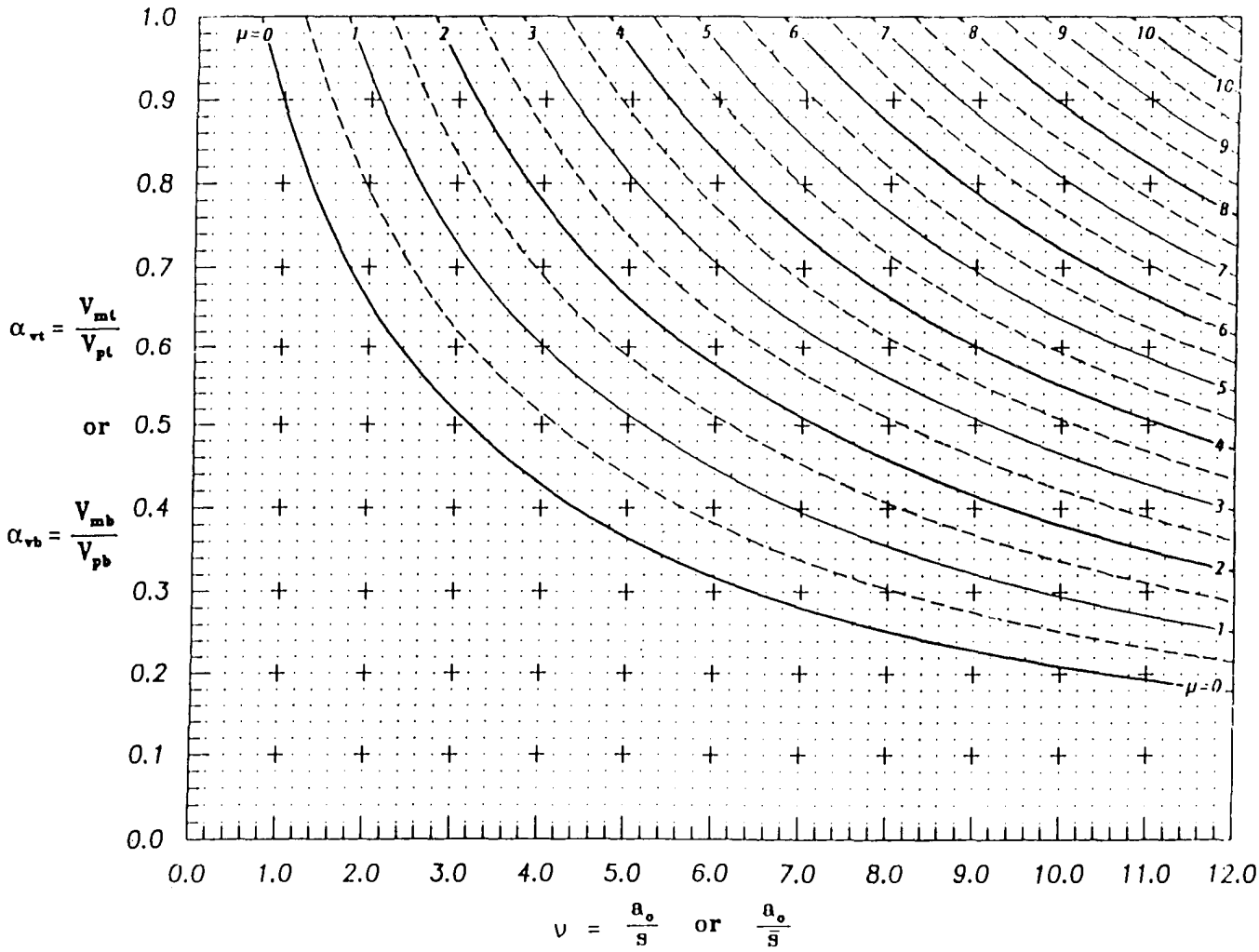


*Fig. A. 2. Ratio of maximum nominal shear strength to plastic shear strength of a tee, $\alpha_v$, versus length-to-depth ratio or effective length-to-depth ratio of the tee, $\nu$. $V_{mb}/V_{pb}$ or $V_{mt}/V_{pt} \leq 1$. $\mu = (2P_r d_r + P_{ch} d_h + P_{cl} d_l)/(V_p s)$.*

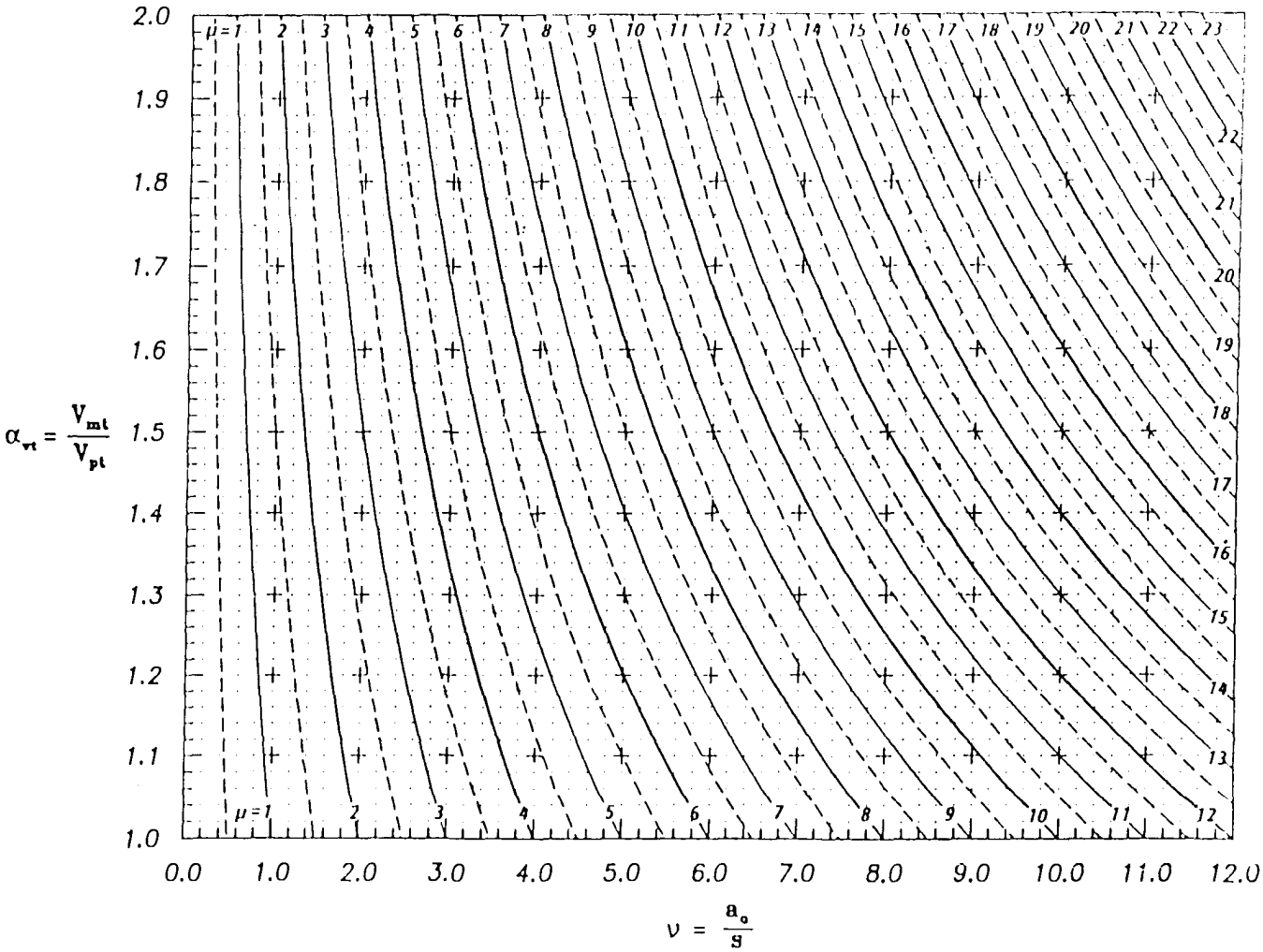


*Fig. A3. Ratio of maximum nominal shear strength to plastic shear strength of the top tee, $\alpha_{vt}$, versus length-to-depth ratio of the tee, $\nu$. $1 \leq V_{mt}/V_{pt} \leq 2$. $\mu = (2P_r d_r + P_{ch} d_h + P_{cl} d_l)/(V_p s)$. Check to ensure that $V_{mt} \leq V_{mt}(sh)$.*

# INDEX

**DESIGN GUIDE SERIES**
**American Institute of Steel Construction, Inc.**
**One East Wacker Drive, Suite 3100**
**Chicago, Illinois 60601-2001**

Pub. No. D802 (3M1093)