21

Steel Design Guide

Welded Connections—A Primer for Engineers

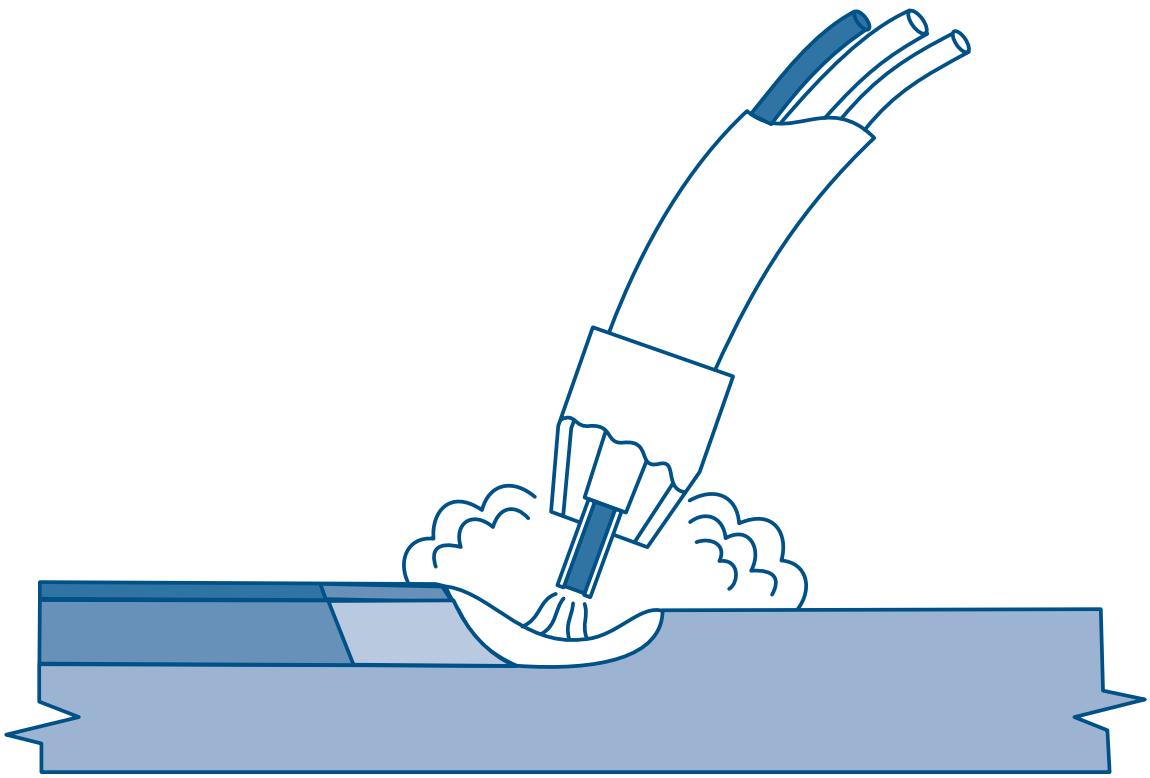

21

Steel Design Guide

Welded Connections—A Primer For Engineers

DUANE K. MILLER, Sc.D., P.E.
The Lincoln Electric Company
Cleveland, Ohio

AMERICAN INSTITUTE OF STEEL CONSTRUCTION, INC.

The information presented in this publication has been prepared in accordance with recognized engineering principles and is for general information only. While it is believed to be accurate, this information should not be used or relied upon for any specific application without competent professional examination and verification of its accuracy, suitablility, and applicability by a licensed professional engineer, designer, or architect. The publication of the material contained herein is not intended as a representation or warranty on the part of the American Institute of Steel Construction or of any other person named herein, that this information is suitable for any general or particular use or of freedom from infringement of any patent or patents. Anyone making use of this information assumes all liability arising from such use.

Caution must be exercised when relying upon other specifications and codes developed by other bodies and incorporated by reference herein since such material may be modified or amended from time to time subsequent to the printing of this edition. The Institute bears no responsibility for such material other than to refer to it and incorporate it by reference at the time of the initial publication of this edition.

Printed in the United States of America

First Printing: June 2006

Acknowledgments

The author would like to thank The Lincoln Electric Company for the use of many of the figures provided in this document and the following reviewers for their insightful comments and suggestions:

Brad Davis
Fred Breismeister
Roger L. Brockenbrough
Charles J. Carter
Jason Ericksen
Stephen M. Herlache
Wladyslaw Jaxa-Rozen
Lawrence Kloiber
Christopher Hewitt
Keith Landwehr
Michael Mayes
Ron Meng
Davis Parsons
Dean Phillips
David T. Ricker
Thomas J. Schlafly
Bill Segui
Robert E. Shaw, Jr.
Victor Shneur
Raymond H.R. Tide
Gary Violette
Kenneth Wiesner

Table of Contents

1. Introduction

1.1 IMPORTANCE OF WELDING

Welding has developed into an established and essential tool of the steel construction industry. Before welding was possible, rivets were used to create structural members and connect them. Today, welding is used to construct members such as plate girders and box sections, as well as to connect structural members together reliably and cost effectively. Along with the contributions of high-strength bolts, welding has rendered riveting obsolete.

Welding permits shapes, plates, and even steel castings to be connected in nearly endless combinations. Steel components can be directly connected without the need for mechanical fasteners and the associated connection materials. Welded connections are aesthetically pleasing, directly satisfying "form follows function" criteria. Steels of various strength levels or thicknesses can be joined together, optimizing designs by strategically placing materials of higher capacity into regions of higher demand. The versatility of welding gives the designer greater freedom than any other method of joining.

Connections are critical to the performance of structural systems, and welded connections are no exception. Accordingly, when welding is improperly used, whether through incorrect design or detailing of the connection, or when a weld is made improperly during fabrication or erection, the connection may fail. Nearly everyone involved with the design, detailing, fabrication, erection, and inspection of welded structures needs to have some knowledge of welding, and this Guide contains basic coverage of the major welding-related issues associated with steel building construction. The principles set forth are essential to achieving dependable, cost-effective welded connections in steel structures.

1.2 SCOPE OF WELDING

Welding engineering is a complex science, involving design and design details, metallurgy, the production aspects of the various welding processes, and inspection. Design involves the selection of joint types, weld types, sizing of welds, and selection of the required weld metal strength, as well as the base metal grades and types. Design details include weld access holes, copes, backing, one-sided versus two-sided welds, groove weld geometries (e.g., V versus bevel), and weld tabs. Metallurgy addresses material composition, physical and mechanical properties, compatibility of materials, preheat for welding, interpass temperature, analysis of weld cracking, and whether postweld heat treatments will be required. Selecting the best welding process for a given application is a complex issue that yields different answers depending upon the particular circumstances of a specific aspect of a project. Inspection of welds ranges from visual to nondestructive processes, such as radiographic and ultrasonic testing. All of these elements of welding may have a significant effect on a completed project, and therefore, this Guide will cover all of these aspects in a systematic manner.

1.3 WELDING-RELATED CODES AND SPECIFICATIONS

A variety of welding-related codes and specifications govern the design, fabrication, erection, and inspection of welded steel structures. AISC standards generally address the design requirements for the structure, while AWS standards typically focus on welding issues. Of necessity, there is some overlap between the coverage of AISC and AWS standards, and a few differences between these standards have been produced by the separate ANSI consensus committees. A general summary of commonly used welding-related standards is contained below.

1.3.1 AISC *Specification for Structural Steel Buildings*

For steel building construction in the United States, the primary standard is the AISC *Specification for Structural Steel Building*s, herein called the AISC Specification. References in this Guide are to the 2005 edition of that standard. The AISC Specification contains a variety of welding-related requirements, including but not limited to the following:

- Acceptable steel designations (A3.1)
- Acceptable filler metals (A3.5)
- Requirements for splices in heavy sections (J1.5)
- Beam copes and weld access holes (J1.6)
- Welds in combination with bolts (J1.8)
- Locations where welded connections are required (J1.10)
- Details of groove welds (J2.1)
- Details of fillet welds (J2.2)
- Available strength of welded joints (Table J2.5)
- Shop fabrication/welding issues (M2)

- Field erection/welding issues (M4)
- Weld quality control issues (M3)
- Weld details for fatigue (Appendix 3)
- Welding issues associated with existing structures (Appendix 5)

In addition, and importantly, J2 of the AISC Specification invokes all the provisions of AWS D1.1, except as noted in the AISC Specification.

1.3.2 AWS *D1.1 Structural Welding Code—Steel*

The AWS *D1.1 Structural Welding Code—Steel*, herein referred to as AWS D1.1, is a comprehensive welding code governing the design of connections, including connection details, welding procedures, acceptable base metals, filler metals and welding joint details, fabrication and erection requirements, welder qualification requirements, stud welding provisions, inspection requirements, and provisions for welding on existing structures. Also contained in this standard are requirements for non-welding metal working operations, such as thermal cutting, and heat curving. AWS D1.1 is intended to govern projects involving steel of ⅛ in. thick or thicker, with a minimum specified yield strength not greater than 100 ksi. The base metal types include carbon and low-alloy steels.

Major sections of AWS D1.1 include the following:

- *Section 1—General Requirements* covers the scope of the code, limitations on its use, key definitions, and an outline of the responsibilities of the major parties involved with welding steel structures.
- *Section 2—Design of Welded Connections* is divided into four parts. Part A deals with provisions common to all structures governed by the code. Part B addresses general requirements applicable to "non-tubular connections", for example, anything other than tubular connections, whether statically or dynamically loaded. Part C covers non-tubular connections subject to cyclic loading and Part D contains provisions for tubular connections, whether statically or cyclically loaded.
- *Section 3—Prequalification* is devoted solely to prequalified welding procedure specifications (WPSs). For a WPS to be prequalified, it must comply with all the provisions of this section of the code. Requirements include prequalified steels, filler metals, preheat levels, weld joint details, welding processes, and welding parameters.
- *Section 4—Qualification* addresses the two subjects of WPS qualification and welding personnel qualification. The types of tests necessary for qualification as well as limitations on the application of various qualification tests are fully detailed therein.
- *Section 5—Fabrication* covers general fabrication practices and techniques required for all work performed in conformance with this code, whether the WPSs employed are prequalified or qualified by test. Some workmanship standards are included in this section.
- *Section 6—Inspection* outlines the responsibilities of the various inspectors associated with steel construction. Inspection tasks are outlined, and some workmanship criteria are contained in this section. The techniques to be used with the various nondestructive testing methodologies are outlined, and acceptance criteria are supplied for different applications.
- *Section 7—Stud Welding* details the requirements for the welding of shear studs, either by the stud welding process or by use of other arc welding processes (e.g., SMAW, FCAW).
- *Section 8—Strengthening and Repairing Existing Structures* briefly reviews the fundamental issues that must be addressed before modifications of existing structures are undertaken.

AWS D1.1 also contains a series of Annexes and a helpful commentary that assists the user in correctly applying the code. Some annexes are mandatory (i.e., part of the code) while others are not. Annex B contains terms and definitions used in the code.

AWS D1.1 is subject to change, and all references contained within this Guide refer to the 2004 edition of this standard.

1.3.3 AISC *Seismic Provisions for Structural Steel Buildings*

The AISC Seismic Provisions were developed to augment the AISC Specification, adding provisions deemed necessary for high-seismic applications, which require capability to dissipate energy through controlled inelastic deformations in major seismic events. Members and connections in the seismic load resisting system (SLRS), including the welds that join various members, are subject to the special requirements contained in the AISC Seismic Provisions.

The AISC Seismic Provisions contain a variety of welding-related requirements although, due to the development of AWS D1.8, such coverage may be significantly reduced in future editions.

AISC Seismic Provisions are subject to change, and all references contained within this Guide refer to the 2005 edition of this standard.

1.3.4 AWS *D1.8 Structural Welding Code—Seismic Supplement*

AWS D1.8 contains the additional provisions intended to be applied to joints or members that are designed to resist yield level stresses or strains during design earthquakes. Just as the AISC Seismic Provisions augment the AISC Specification, so AWS D1.8 supplements AWS D1.1. When AWS D1.8 is specified, all the provisions of AWS D1.1 still apply, unless modified or superseded by AWS D1.8. In AWS D1.8, it is assumed that the structure has been designed in accordance with the AISC Seismic Provisions.

AWS D1.8 is subject to change, and all references contained within this Guide refer to the 2005 edition of this standard.

1.3.5 AWS *D1.3 Structural Welding Code—Sheet Steel*

AWS D1.3 covers welding of structural sheet and strip steel, including cold-formed members equal to or less than 3⁄16 in. thick. Applications wherein sheet steel is joined to supporting structural steel, such as decking to beams, are also covered. When AWS D1.1 and AWS D1.3 are specified, the applicable provisions of each apply.

AWS D1.3 is subject to change, and all references contained within this Guide refer to the 1998 edition of this standard.

1.3.6 Other AWS D1 Codes

AWS publishes other standards governing applications that are beyond the scope of this Guide, including the following:

- AWS *D1.2 Structural Welding Code—Aluminum*
- AWS *D1.4 Structural Welding Code—Reinforcing Steel*
- AASHTO/AWS *D1.5 Bridge Welding Code*
- AWS *D1.6 Structural Welding Code—Stainless Steel*

These other standards should be applied as appropriate to the specific materials and/or project.

2. Welding and Thermal Cutting Processes

2.1 INTRODUCTION

In total, there are approximately 100 different welding and thermal cutting processes. Currently, in the fabrication and erection of steel buildings, three welding processes dominate, as do three thermal cutting processes. These processes, plus a few others that are occasionally used for specialized applications, will be covered in this section.

The choice of welding process is usually left up to the contractor, as the contractor is typically best positioned to select the optimal process for a given application. In unique situations, the engineer may specify a special process, or processes for specific applications in the contract documents, but this practice is uncommon. The selection of the welding process is typically considered part of the "means and methods" of construction, and the choice of process may significantly affect the cost of a project. When properly used, all of the welding processes listed in AWS D1.1 are capable of delivering welds with the requisite quality for building construction. Of course, any welding process can be abused, and all can produce welds of poor quality if improper procedures are used, or if the welder's skills are inadequate.

Although the selection and control of the welding process is typically the responsibility of the contractor, it is important that all parties involved understand these processes in order to ensure high quality and economical fabrication. Particularly when problems arise on a project, the engineer may be required to become involved with welding process issues, and a basic knowledge of how the process operates will aid in resolving construction problems.

2.1.1 Requirements for Welding

This Guide addresses the welding processes commonly used for structural steel fabrication and erection, all of which involve melting and mixing of filler metals and base metals, followed by solidification and fusion of the various materials. Brazing and soldering involve melting of the filler metal, but not melting of the base metal—yet fusion is achieved even though only one material is melted. The oldest form of welding, technically named forge welding but commonly called blacksmith welding, involved heating (but not melting) two pieces of metal and using a hammer to forge the two together—achieving fusion without any melting. This prompts the reasonable question—what is required in order to achieve a weld (e.g., fusion)?

A single piece of metal is composed of millions of individual atoms. Each of these atoms is connected to surrounding atoms, resulting in what is considered a single solid piece of metal. In the simplest terms, fusing two separate pieces of pure metal together requires forming the same bonds between the two pieces as exist within the individual pieces. In metals, these metallic bonds form when individual metallic atoms are brought close enough together that they share a common "cloud" of electrons. The required closeness of the two atoms is close indeed—measured in units of angstroms. However, when metallic atoms are brought into close contact, these bonds form. Thus, the first requirement for fusion is atomic closeness.

The previous paragraph emphasizes "metallic atoms" to differentiate them from oxidized metals. When unoxidized metallic surfaces are exposed to the atmosphere, such surfaces readily oxidize, and the forces that would normally encourage the metallic atoms to bond to each other are neutralized. Instead of bonding to another metallic atom, bonding is made with an oxygen atom. To achieve fusion, the atoms must be metallic (e.g., not combined with oxygen), leading to the second requirement for fusion: atomic cleanliness.

In theory, if two pieces of steel with oxide-free surfaces are brought into close contact, the attractive forces between the two pieces should cause the two to bond to each other. In practice, this does not happen because, on an atomic level, the atoms are separated by significant distances, restricting the first requirement for fusion: atomic closeness. Furthermore, surfaces will remain oxide-free for only short periods of time, and once such oxides form, the second requirement for fusion, atomic cleanliness, is violated. Thus, welding processes rely on a variety of methods of oxide removal and protection of the surfaces before welding. In arc welding, this is typically accomplished with fluxes and metallic elements in the filler metal that deoxidize the weld pool. Additionally, heat and/or pressure are used to bring the atoms into close proximity with one with another.

With this background in mind, the following definition of a weld becomes more meaningful:

> "A localized coalescence of metals or nonmetals produced by heating the materials to the welding temperature, with or without the application of pressure, or by the application of pressure alone and with or without the use of filler material." (AWS A3.0).

In arc welding, heat is always applied, although pressure typically is not. All arc welding processes involve melting of the metals being joined, and this gives rise to another element associated with the welding processes wherein metals are melted: shielding.

Molten metal, like the weld pool, has the ability to dissolve large quantities of gases such as nitrogen and oxygen. As the metal cools, the solubility of these gases in the liquid metal decreases, and dissolved gases precipitate out or, alternatively, react with metallic atoms, forming various nitrides and oxides. When this evolution of gas occurs near the solidification temperature, the gas bubbles exiting the liquid metal can leave behind spheres or cylindrical cavities, just as the metal solidifies. Such volumetric voids in the weld metal are called porosity. Additionally, small quantities of nitrogen left behind in the metal can cause embrittlement, even if no porosity is present. Metallic compounds can combine with nitrogen and oxygen to form inclusions and reduce mechanical properties. Given that the atmosphere is composed of roughly 80 percent nitrogen and 19 percent oxygen, both the weld pool and the drops of metal that leave the electrode must be protected from these gases.

Shielding is typically accomplished by one of two means, or a combination of both. Fluxes melt to form slags, which may be used to coat the individual droplets of metal that leave the electrode. Additionally, once the slags contact the weld pool, they float to the surface and shield the pool as well. Slags act as a mechanical lid on the weld pool, keeping nitrogen and oxygen from contaminating the weld deposit. Additionally, such slags perform another important function: For out-of-position welding (vertical, overhead), the slag constitutes a mechanical support for the liquid weld metal, helping to shape the weld bead and hold it in place.

The second means of shielding is through gases. Such gases may be generated from fluxes contained in, on, or around the electrode, or shielding gas may be delivered directly to the weld region. Suitable shielding gases include inert gases, such as argon and helium, or carbon dioxide, which is not inert but is sufficient for shielding nonetheless. These gases displace the atmosphere, moving nitrogen and oxygen away from the region.

In summary, all of the welding processes are required to accomplish the goals of atomic closeness and atomic cleanliness. To achieve atomic closeness, heat or pressure is applied between the materials being joined. Atomic cleanliness is achieved through slags and metallic elements in the electrode, which deoxidize and denitrify weld pools. Shielding ingredients, whether slags or gases, protect the weld from the atmosphere. With this common base of all welding processes, the differentiation between the various processes is simply in the methodology by which these conditions are achieved.

2.1.2 Arc Welding as Compared to Other Welding Processes

"Arc welding" defines a group of welding processes that involve heating the work pieces with an electric arc. Other major welding process groupings include brazing, soldering, oxyfuel gas welding, resistance welding, solid-state welding, and the catch-all category "other processes."

Brazing and soldering are characterized by processes that melt the filler metals, but not the base metals. Brazing and soldering are differentiated from each other simply by the melting point of the filler material: brazing filler metals melt at temperatures above 450 °F, whereas soldering filler metals melt at lower temperatures. Neither brazing nor soldering is used for structural steel connections.

Oxyfuel gas welding (OFW) utilizes a gas flame to generate the thermal energy necessary to melt the materials to be joined. Years ago, gas welding was used to construct a few steel buildings, but the process was found to be too slow and too expensive to be commercially viable.

The resistance welding processes generate thermal energy by passing electrical current through the work pieces, where the interface between the two pieces constitutes a point of high electrical resistance. In addition, pressure is applied between the two work pieces. The process is usually applied to lap joints of relatively thin, clean materials, typically in the form of resistance spot welding (RSW). The longitudinal butt seam on hollow structural sections (HSS) is typically welded with the resistance or induction seam welding process (RSEW). Electroslag welding (ESW), discussed in detail in Section 2.7 of this Guide, is sometimes classified as a resistance welding process, as will be explained later.

In the remaining broad categories of solid-state welding and "other processes," there are no processes that are commonly applied to structural steel fabrication, except when electroslag welding is placed in the "other" category. Solid-state welding processes include exotic and interesting processes like diffusion welding, explosion welding, friction welding, and ultrasonic welding. The catch-all category includes processes such as electron beam welding, laser welding, and thermite welding. Most of these currently are specialized processes that have not found commercial application in the structural steel industry.

While there are common elements among all welding processes, arc welding is differentiated from the others by the presence of the arc and the melting of both base metal and filler metals, accompanied by some form of shielding.

2.1.3 Process Issues and Concerns for the Engineer

While it is typically best to leave the process selection up to the contractor, a few points of particular importance warrant the engineer's specific attention. The details of these issues will be discussed under the individual processes, but

this checklist is supplied to highlight these specific points of interest.

- SMAW and "low-hydrogen" electrodes: Some electrodes for shielded metal arc welding (SMAW) are referred to as "low hydrogen" while others are not. Because both types of electrodes are available, and because the use of electrodes that are not low hydrogen may lead to cracking, it is important to know the differences in these filler metals and where "low-hydrogen" electrodes are required. AWS D1.1 addresses the acceptability of these electrodes for prequalified welding procedure specifications (WPSs).

- GMAW and "short-circuit transfer": Multiple modes of arc transfer are possible with gas metal arc welding (GMAW). One of these modes, short circuit transfer, is a low-energy mode of transfer, which may lead to the weld defect of incomplete fusion. This is a serious defect that behaves much like a crack. Because the same electrode, equipment, shielding gas, and other factors can be used for both short-circuit transfer and other modes of transfer, it is important to understand the conditions under which short-circuit transfer may occur. AWS D1.1 does not permit the use of short-circuit transfer with prequalified WPSs.

Figure 2–1. SMAW application.

- SAW and active fluxes: Submerged arc welding (SAW) can be performed using neutral or active fluxes. Improperly used, active fluxes can lead to a buildup of alloy within the weld deposit, resulting in high-strength, low-ductility weld metal. However, active fluxes offer specific advantages in other situations. It is important to understand how and where active fluxes should be used, and where they should not be used.

- FCAW and single-pass/limited-thickness electrodes: Certain flux cored arc welding (FCAW) electrodes are intended to be used for making single-pass welds. When misapplied and used in multiple-pass applications, such electrodes may induce cracking. AWS D1.1 precludes the use of these electrodes for prequalified WPSs.

- ESW and EGW: Electroslag welding (ESW) and electrogas welding (EGW) are high-deposition-rate, high-energy-input, vertical-up welding processes. The very high heat input results in very slow cooling rates for the weld and heat-affected zone, and these regions may have impaired notch toughness or reduced strength. The potential negative effect of high heat input is of particular concern when ESW and EGW are used on quenched and tempered steels. AWS D1.1 precludes the use of ESW/EGW for prequalified WPSs.

Welding processes fit into three broad categories of coverage in AWS D1.1: (a) processes that are "prequalified," (b) processes that are "code approved," and (c) "other" processes. The "prequalified" processes are those that may be

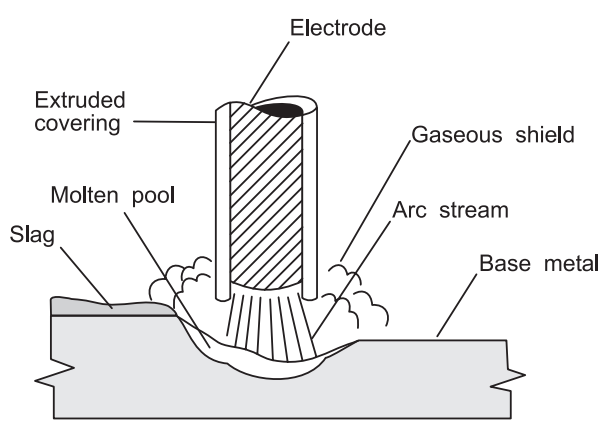

Figure 2–2. SMAW process.

used with a prequalified welding procedure specification (WPS), that is, a WPS that conform to all the requirements for prequalification, but is not subject to qualification testing. "Code approved" processes are those that are recognized by the code, and for which the code has specific requirements, but the use of such processes requires that the WPS be qualified by test. Finally, processes in the "other" category are those that also use a WPS that is qualified by test, but for which the code does not provide specific testing criteria. The engineer must evaluate the suitability of such processes and testing methodologies. For further information, see Chapter 7 of this Guide.

The following discussion of the processes will note the category in which AWS D1.1 places each process.

2.2 SMAW

2.2.1 Fundamentals

In shielded metal arc welding (SMAW), commonly known as "stick" welding or manual welding, an arc is established between a coated electrode and the weld pool (Figure 2–1). Shielding for the process is supplied by the electrode coating, which decomposes as the filler metal is consumed. Metal from the metallic core of the electrode is melted and becomes part of the deposited weld (Figure 2–2).

SMAW is the successor to bare metal arc welding, which relied only on a light coating on the electrode and was essentially unshielded. With the addition of the flux coating on the electrode, weld quality was significantly enhanced.

SMAW is characterized by versatility, simplicity, and flexibility. In the 1940s, 1950s and 1960s, SMAW was commonly used for field erection of steel buildings, as well as for shop fabrication that could not be done with submerged arc welding. The advent of flux cored arc welding in the 1960s, however, displaced much of the SMAW in both the shop and field.

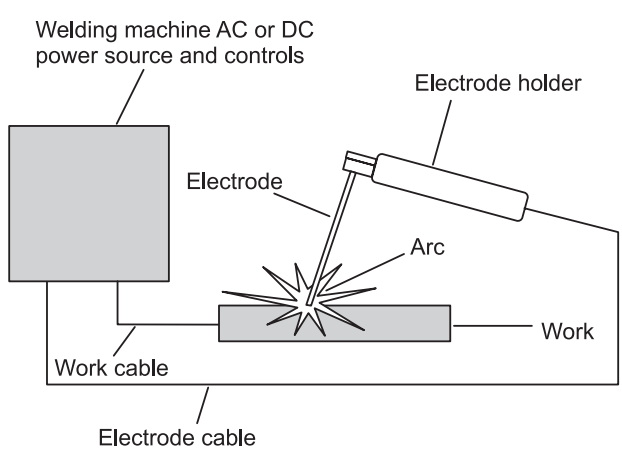

Figure 2–3. Typical SMAW welding circuit.

Today, SMAW is commonly used for tack welding, fabricating miscellaneous components, and repair welding. SMAW has earned a reputation for dependably depositing high-quality welds. It is, however, slower and more costly than other methods of welding. In order to obtain quality welds, more welder skill is typically required for SMAW as compared to the semi-automatic processes.

SMAW is one of the prequalified processes listed in AWS D1.1, and the WPS used with this process can be prequalified, providing all the criteria of Section 3 of AWS D1.1 are met.

2.2.2 Equipment

SMAW welding is performed using a power supply with constant current (CC) output (Figure 2–3). Formerly, this was called variable voltage (VV). Either alternating current (AC) or direct current (DC) may be used. If primary electrical power is available, a transformer (for AC output) or a transformer/rectifier (for DC output) is used to convert the high-voltage alternating current into high-amperage output, suitable for welding. Today, small, lightweight, and highly portable inverter power supplies can perform this function more efficiently, reducing operating costs. When primary power is not available, the same type of equipment may be powered by portable power generation systems. Alternatively, individual engine-driven welders, fueled by gasoline, diesel fuel, or propane, can be used to generate the necessary welding power directly (Figure 2–4).

Figure 2–4. Engine-powered welding machine.

2.2.3 Consumables

Electrodes for SMAW consist of a solid-core wire, surrounded by a coating of material called flux. The materials vary in composition, but the purpose of all coatings is to shield the molten weld metal from the atmosphere. After this function is complete, the decomposed coatings form a slag coating that covers the final weld. The slag is removed after welding. One end of the electrode has no coating; this is the grip end where the exposed core wire is inserted into the electrode holder.

The size of the electrode is based upon the diameter of the core wire. Electrodes range in size from ⅛ in. to 3⁄16 in. for most structural work, although smaller and larger sizes are available. Larger electrodes can carry more welding current, and thus melt faster, yielding higher production rates. The as-received lengths of the electrodes vary with the diameter and an electrode that is 14 to 18 in. long is typical (Figure 2–5).

The American Welding Society (AWS) publishes a variety of filler metal specifications under the jurisdiction of the A5 Committee; the filler metal specification AWS A5.1 addresses the particular requirements for carbon steel-covered electrodes used with the shielded metal arc welding process, while AWS A5.5 similarly covers the low-alloy electrodes. These specifications outline the required mechanical properties and chemical compositions of welds deposited by various filler metal classifications.

All AWS A5.1 electrodes yield deposits with either 60 or 70 ksi minimum tensile strength, while AWS A5.5 low-alloy electrodes will give deposit strengths from 70 to 120 ksi minimum. Because most structural steel applications involve materials such as ASTM A992, A36, A572 Grade 50, and A500, SMAW electrodes for such applications will likely be carbon steel electrodes governed by AWS A5.1. When higher-strength welds are required because higher-strength steels such as ASTM A514 or A517 are used, AWS A5.5 electrodes will likely be used. For weathering steels, such as ASTM A588, and when the weld deposit is required to have similar atmospheric corrosion resistance, the alloy electrode is governed by AWS A5.5.

Figure 2–5. SMAW electrodes.

2.2.4 Electrode Classification System

AWS A5.1 and AWS A5.5 both contain classification systems for identifying the various types of SMAW electrodes. The AWS A5.1 methodology consists of the letter "E" followed by four digits (Figure 2–6).

Using an E7018 electrode, for example, the minimum specified tensile strength is 70 ksi, the "1" indicates that the electrode can be used in all positions, and the "8" indicates this electrode has a low-hydrogen coating, operates on direct current (DC) with the electrode connected to the positive side of the circuit (i.e., DC+) or alternating current (AC), and the deposited weld metal can deliver a minimum specified CVN energy of 20 ft-lb at –20 °F.

Under the low-alloy specification, AWS A5.5, a similar format is used to identify the various electrodes. The most significant difference, however, is the inclusion of a suffix letter and number indicating the alloy content. An example is an "E8018-C3" electrode, with the suffix "-C3" indicating the electrode nominally contains 1 percent nickel.

There are a variety of other suffixes that may be applied to either AWS A5.1 or AWS A5.5 SMAW electrodes. These suffixes address issues such as specific military classifications, extra CVN toughness capabilities, and the diffusible hydrogen content of the deposited weld metal. These designations may be of great importance to the contractor, but are typically not important to the structural engineer for whom this Guide has been prepared. Further detail on these suffixes,

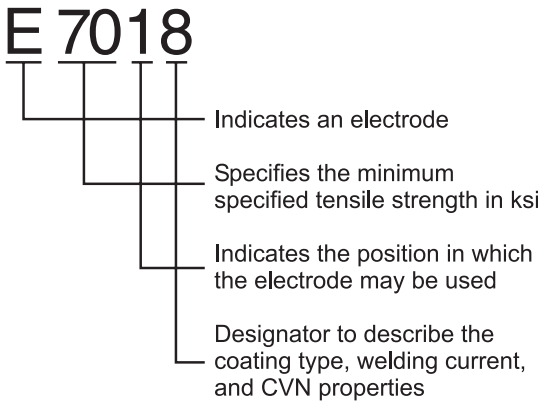

Figure 2–6. SMAW electrode classification system.

Table 2–1. SMAW Electrodes with Respect to Coating Type		
Filler Metal Specification	**Non-Low-Hydrogen Coatings***	**Low-Hydrogen Coatings**
AWS A5.1:2004	E6010, E6011, E6012, E6013, E6019, E6020, E6022, E6027, E7014, E7024, E7027	E6018, E7015, E7016, E7018, E7028, E7048
AWS A5.5-95	EXX10-X, EXX11-X, EXX13-X, EXX20-X, EXX27-X	EXX15-X, EXX16-X, EXX18-X
*Note: The first "XX" in these abbreviated electrode classifications is the strength designator, which may be 70, 80, 90, 100, 110, or 120, and corresponds to a minimum specified tensile strength of the deposited weld		

as well as other details regarding the electrode classification system, can be obtained from the filler metal specifications themselves, or from other sources listed in the References.

2.2.5 Low-Hydrogen SMAW Electrodes

The AWS A5.1 and AWS A5.5 classifications address filler metals with "low-hydrogen" coatings, as well as electrodes that do not have such coatings. Low-hydrogen coatings are specially formulated to have very low levels of moisture, resulting in weld deposits that will be low in diffusible hydrogen. This in turn yields welds and heat-affected zones that are more resistant to hydrogen-assisted cracking (see Chapter 5 of this Guide).

Note that there are situations where hydrogen cracking is not anticipated, such as with lower-strength steels and steels with lower levels of hardenability. There are also situations where the potential for cracking is reduced, such as by the use of higher preheat levels or under conditions of low restraint. In these cases, the non-low-hydrogen electrodes offer certain advantages, such as a greater ability to weld on contaminated materials and handle poor fit-up conditions.

Figure 2–7. SMAW hermetically sealed cans.

When welding on steels with minimum specified yield strengths of 50 ksi or more, AWS D1.1 Table 3.1 requires for prequalified welding procedure specifications (WPS) that all SMAW electrodes be of the low-hydrogen type. Given that ASTM A992 is standard for W-shapes today, SMAW electrodes with low-hydrogen coatings are generally required. When low-hydrogen electrodes are used for steels where either type of electrode is acceptable, the required levels of preheat (as identified in Table 3.2 of AWS D1.1) are actually lower, offering additional economic advantages.

Table 2–1 summarizes the various SMAW electrodes with respect to the coating types.

For AWS A5.5 filler metals as shown in Table 2–1, the suffix "X" in the designator represents the alloy composition of the deposit. It consists of a letter or two, followed by a number. Table 2–2 summarizes these alloy groups.

In general, welds on structural steel applications are left in the as-welded condition and not subject to post-weld heat treatment (e.g., stress relief). Accordingly, electrodes classified in the PWHT condition typically should not be used for as-welded applications, unless their use in this condition is supported by test data.

2.2.6 Care and Storage of Low-Hydrogen Electrodes

Low-hydrogen electrodes must be dry if they are to perform properly. Manufacturers in the United States typically supply low-hydrogen electrodes in hermetically sealed cans (Figure 2–7). When electrodes are so supplied, they may be used without any preconditioning; that is, they need not be heated before use. Electrodes in unopened, hermetically sealed containers should remain dry for extended periods of time under good storage conditions. Once electrodes are removed from the hermetically sealed container, they should be placed in a holding oven to minimize or preclude the pick-up of mois-

Table 2–2. Alloy Groups		
Alloy Designator	**Alloy System**	**Classification Condition**
A1	Carbon-Molybdenum Steel	Post-Weld Heat Treated
B1, B2, B2L, B3, B3L, B4L, B5, B6L, B7, B7L, B8, B8L, B9	Chromium-Molybdenum Steel	Post-Weld Heat Treated
C1, C1L, C2, C2L, C5L	Nickel Steel	Post-Weld Heat Treated
C3, C3L, C4	Nickel Steel	As-Welded
MN1	Nickel-Molybdenum Steel	As-Welded
D1, D2, D3	Manganese-Molybdenum Steel	Post-Weld Heat Treated
G	General Low-Alloy Steel	As-Welded or Post-Weld Heat Treated
M	Military-Similar Electrodes	As-Welded
P1	Pipeline Electrodes	As-Welded
W1, W2	Weathering Steel Electrodes	As-Welded

ture from the atmosphere (Figure 2–8). These holding ovens generally are electrically heated devices that can accommodate several hundred pounds of electrodes. They hold the electrodes at temperatures of approximately 250 to 300 °F.

Electrodes used in fabrication are taken from these ovens. Fabricators and erectors should establish a practice of limiting the number of electrodes distributed at any given time.

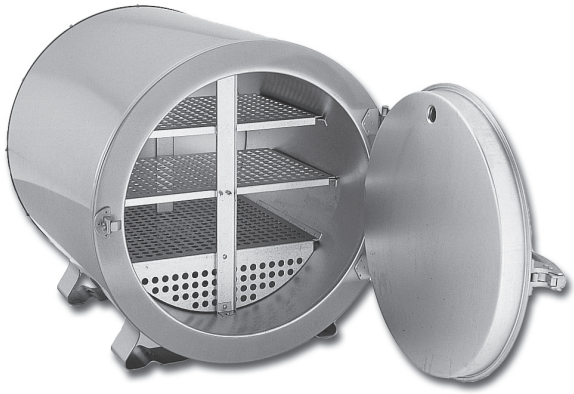

Figure 2–8. Electrode holding oven.

Supplying welders with electrodes twice a shift (at the start of the shift and at lunch, for example) minimizes the risk of moisture contamination. However, the optional designator "R" indicates a low-hydrogen electrode that has been tested to determine the moisture content of the covering after exposure to a moist environment for 9 hours and has met the maximum level permitted in ANSI/AWS A5.1. Electrodes must be returned to the heated cabinet for overnight storage.

Once the electrode is exposed to the atmosphere, it begins to pick up moisture. AWS D1.1 limits the total exposure time as a function of the electrode type. Higher-strength electrodes are subject to more restrictive requirements since the hydrogen cracking concerns are typically greater when such electrodes are used.

Some SMAW electrodes with low-hydrogen coverings are supplied in cardboard containers. This is not commonly done for structural fabrication, although the practice can be acceptable if specific and appropriate guidelines are followed. The electrodes must be preconditioned before welding. Usually, this means baking them at temperatures in the 700 to 900 °F range to reduce moisture. In all cases, the electrode manufacturer's guidelines should be followed to ensure a baking procedure that effectively reduces moisture without damaging the covering. Electrodes removed from damaged hermetically sealed cans should be similarly baked at high temperature. The manufacturer's guidelines must be

followed to ensure that the electrodes are properly conditioned.

2.2.7 Process Advantages/Limitations

SMAW continues to be a viable process, despite some inherent disadvantages. The chief advantages of the process are its simplicity, flexibility, and familiarity. In addition to standard safety equipment, all that is required to weld with SMAW is a power source, work cable and clamp, an electrode cable and holder, and an electrode. It is the simplest of all the arc welding processes. By just exchanging the electrode, one can change from welding carbon steel to welding stainless steel. By changing the electrode and machine setting, it is possible to go from a high-deposition-rate, high-amperage, flat-position welding procedure to an overhead alternative. Finally, nearly all welders are initially trained using SMAW, and, therefore, amongst structural steel welders, it is the exception to find personnel who don't have some experience with SMAW.

The chief limitations of SMAW rest in the nature of the electrode, which has two inherent disadvantages. First, the electrode is a "variable resistor," that is, its electrical resistance continuously changes as it is consumed. Before the arc is struck, the electrode is physically cold and long, and has a given electrical resistance. As soon as the arc is struck, the electrode begins to heat up as a result of the electrical resistance. This increases the resistance to current flow, but as the electrode is consumed, the length decreases, offsetting some of the increased resistivity of the heated electrode.

When too much current (amperage) is passed through the variable resistor, the electrical resistivity of the electrode increases much faster than the reduction in the length. This leads to overheating the electrode, which damages the electrode coating and may affect the quality of the deposited weld. For this reason, the welding current must be limited for a given size and type of electrode. Higher currents generally mean higher rates of productivity, and so this characteristic of SMAW restricts productivity.

Figure 2–9. Stick Welding Application.

The second limitation of SMAW is that the electrode is of a finite length, and when it is consumed, the remaining electrode (called a stub) must be removed from the holder, and a new electrode inserted. This has several consequences. First, the welder must stop welding, interrupting productivity. When this occurs in the middle of a weld, an otherwise unnecessary stop/start is created. Finally, because the stubs cannot be consumed, the process is less efficient in the use of purchased electrodes. Out of 100 lbs of purchased electrode, approximately 20 lbs of stubs will be created.

2.2.8 Applications

Today, SMAW is seldom used for the primary shop fabrication or field erection of buildings due to its lower productivity. However, because of its simplicity, it is used where access for equipment is limited or when transporting and positioning of equipment would be a major task (Figure 2–9). A prime example is tack welding—moving equipment around a structural component may take more time than making the tack welds. Thus, SMAW is often used for this purpose. Portability makes SMAW ideal for applications such as welding sheet steel decks to supporting members.

The flexibility of SMAW may make it the contractor's process of choice where a whole range of welds must be made. This is often the case for smaller field erection projects where a limited number of welders may be used to make a variety of welds. Repair welds are often made with SMAW, again due in part to its flexibility.

The chief disadvantage of SMAW lies in its inherently lower productivity rate, and thus it is not typically used for large, long welds, which are better performed with more automated welding processes.

2.3 FCAW

2.3.1 Fundamentals

In flux cored arc welding (FCAW), an arc is established between a continuous flux-cored tubular electrode and the weld pool. Inside the metal sheath of the electrode is a combination of materials that include flux and perhaps metal powders. The flux ingredients inside the electrode perform the same function as the flux on the outside of an SMAW electrode, and eventually form an extensive slag cover over the weld bead. FCAW electrodes are said to be "continuous." In reality, they have a finite length, but since these wire

electrodes are spooled onto packages that may consist of anywhere from 1 to 1,000 lbs of material, they are virtually continuous in comparison to SMAW electrodes.

FCAW may be applied automatically or semi-automatically, although most FCAW is done semi-automatically. In semi-automatic welding, the welder holds the gun and controls travel speed, whereas in automatic welding, these functions are mechanically controlled. With SMAW, a manual welding process, the welder must maintain the arc length (the gap between the electrode and the workpiece), while feeding the electrode into the puddle and propelling the electrode along the joint. In automatic and semi-automatic welding, the operator does not need to maintain the arc length or feed the electrode into the puddle. The power supply maintains the arc length, and the wire feeder delivers the electrode to the arc. In automatic welding, a mechanism propels the electrode along the joint.

Within the category of flux cored arc welding, there are two specific subsets: gas-shielded flux core (FCAW-G) (Figure 2–10) and self-shielded flux core (FCAW-S) (Figure 2–11). Self-shielded flux cored electrodes require no external shielding gas. The entire shielding system results from the flux ingredients contained within the core of the tubular electrode. The gas-shielded versions of flux cored electrodes utilize an externally supplied shielding gas. Self-shielded flux cored electrodes are better for field welding situations where wind may displace the shielding gas required for FCAW-G. The FCAW-G process tends to be more operator friendly and is generally preferred in situations where the gas shielding can be protected from disruption.

FCAW, in both gas-shielded and self-shielded versions, was initially developed in the 1950s and became a commercial reality in the 1960s. FCAW is one of the prequalified processes listed in AWS D1.1, and the WPSs used with this process can be prequalified, provided that all of the criteria of Section 3 of AWS D1.1 are met.

2.3.2 Equipment

FCAW requires a power supply, a wire feeder, a gun and cable system, a work lead and clamp, and a power lead that runs from the power source to the wire feeder. As compared to SMAW, the additional equipment includes the wire feeder and the gun and cable assembly (Figure 2–12). For gas-shielded flux core, some type of shielding gas regulator and flow meter, as well as hoses, are also required. FCAW is typically and optimally performed using a constant voltage (CV) power supply, formerly called constant potential (CP). The wire feeder mechanically drives the coiled electrode through the gun and cable system. Typically, when the welder depresses the switch on the gun, simultaneously, the wire feeder delivers the electrode, the gas shielding (when required) begins to flow, and the power source output is energized. (Note: Some power supplies are electrically "hot" at all times. When this is the case, the electrode is "hot" all the time, as are the various parts of the gun and cable assembly.) Some wire feeders are small, lightweight, and compact units that can be moved from one location to another, while others are larger and more likely to be part of a welding station. Gun cable assemblies are typically 10 to 15 ft long, allowing for some movement of the gun from the wire feeder.

2.3.3 Consumables

FCAW filler metals are always tubular, with a metallic tube surrounds the internal flux. The diameter of such electrodes ranges from 0.030 in. to ⅛ in., with 0.045 in. to 3⁄32 in. being typical for structural steel work. Smaller diameter electrodes (0.072 in. and smaller) are typically used for out-of-position work (e.g., vertical and overhead), while larger electrodes (1⁄16 in. and greater) are typically used for flat and horizontal welds.

The various electrodes are wound on spools, coils, or reels, or inserted into drums. Ranging in capacity from 1 lb

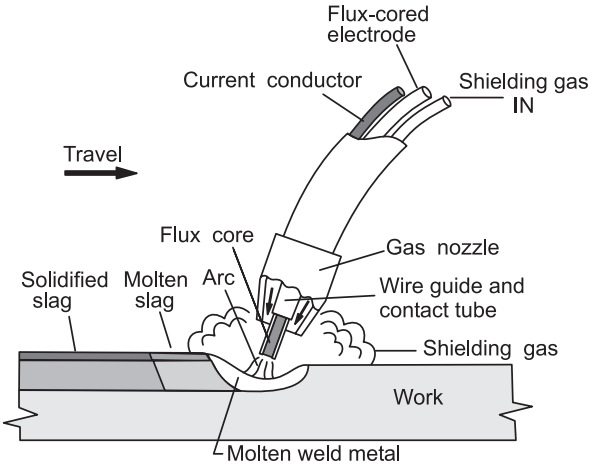

Figure 2–10. Gas shielded FCAW.

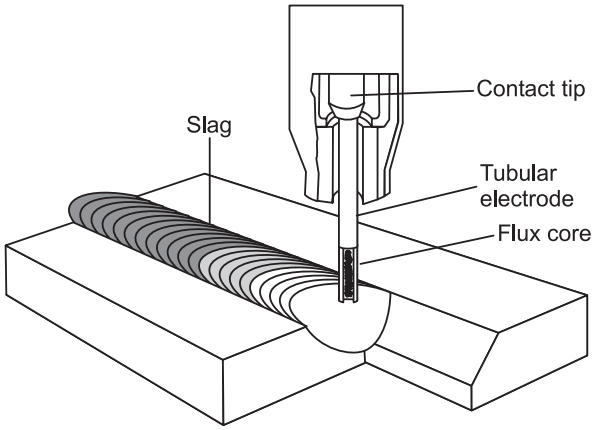

Figure 2–11. Self shielded FCAW.

up to 1,000 lbs or more, the package size is typically dictated by the balance between the need for portability and a desire to limit the number of electrode changes (Figure 2–13).

For FCAW-G, an additional consumable is the shielding gas. Most of the gas-shielded flux cored electrodes utilize carbon dioxide or argon-CO_2 mixtures for the shielding media. The shielding gas may affect mechanical properties, including yield and tensile strength, elongation, and notch toughness. This is largely due to the difference in alloy recovery—that is, the amount of alloy transferred from the filler material to the weld deposit. The shielding gas selected should be that required of the filler metal classification or supported by the filler metal manufacturer's recommendations or suitable test data.

2.3.4 Electrode Classification

AWS A5.20 and AWS A5.29 specify the requirements for flux cored arc welding filler metals. AWS A5.20 covers carbon steel electrodes, while AWS A5.29 addresses low-alloy steel materials.

For the example shown in Figure 2–14 (E71T-1C), the "7" conveys the same message as does the "70" for the SMAW of E7018—that the minimum specified tensile strength is 70 ksi. The "1" also means the same thing for both classifications—the electrode is suitable for use in all positions. However, for FCAW, a "0" at this location indicates the suitability of the electrode for welding in the flat and horizontal position only. Note that this differs from SMAW for which flat and horizontal position electrodes are designated by replacing the "1" with a "2" instead. Like the "8" in the SMAW example, the final "1" in the E71T-1 example conveys a variety of information: The electrode is for FCAW-G (gas shielded), operates on direct current with positive polarity (DC+), has a rutile slag system, is suitable for single- and multiple-pass welds, and must be capable of depositing weld metal with a minimum Charpy V Notch (CVN) toughness of 20 ft-lb at 0 °F. The final "C" in the example indicates that carbon dioxide (CO_2) shielding gas is used for the classification of this electrode. An "M" in this location would indicate a mixed gas (Argon/CO_2) was used.

Under AWS A5.29 for low-alloy electrodes, a suffix letter followed by a number appears at the end. Common designations include "Ni1" indicating a nominal nickel content in the deposited metal of 1 percent. Other suffix designators may be used that indicate diffusible hydrogen limits.

Some of the electrodes listed in AWS A5.20 and AWS A5.29 have minimum specified notch toughness values, although others do not. Some AWS A5.20 electrodes are restricted to single-pass applications, and others have restrictions on the thickness for their application. All AWS A5.29 electrodes are suitable for multiple-pass applications. AWS D1.1 lists in Table 3.1 the prequalified filler metals that are

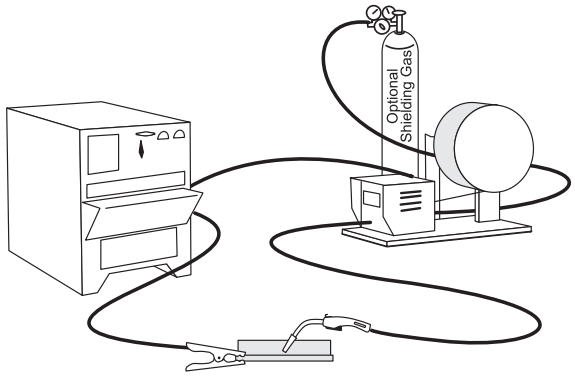

Figure 2–12. FCAW-G equipment.

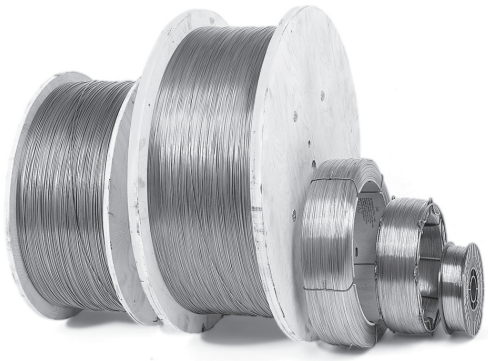

Figure 2–13. FCAW Electrode Packaging.

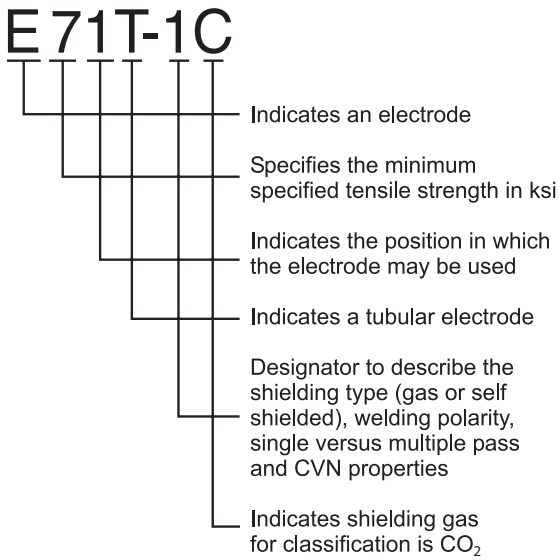

Figure 2–14. FCAW electrode classification system.

Table 2–3. Summary of Data from AWS A5.20:2005				
Filler Metal Specification	**Electrode Classification**	**Gas Shielded or Self Shielded**	**Single or Multiple Pass**	**Minimum Specified CVN Properties**
AWS A5.20:2005	E7XT-1X	Gas Shielded	Multiple Pass	20 ft-lb @ 0° F
	E7XT-2X	Gas Shielded	Single Pass	Not Specified
	E70T-3	Self Shielded	Single Pass	Not Specified
	E70T-4	Self Shielded	Multiple Pass	Not Specified
	E7XT-5X	Gas Shielded	Multiple Pass	20 ft-lb @ –20° F
	E70T-6	Self Shielded	Multiple Pass	20 ft-lb @ –20° F
	E7XT-7	Self Shielded	Multiple Pass	Not Specified
	E7XT-8	Self Shielded	Multiple Pass	20 ft-lb @ –20° F
	E7XT-9X	Gas Shielded	Multiple Pass	20 ft-lb @ –20° F
	E70T-10	Self Shielded	Single Pass	Not Specified
	E7XT-11	Self Shielded	Multiple Pass*	Not Specified
	E7XT-12X	Gas Shielded	Multiple Pass	20 ft-lb @ –20° F
	E6XT-13, E7XT-13	Self Shielded	Single Pass	Not Specified
	E7XT-14	Self Shielded	Single Pass	Not Specified
	E6XT-G, E7XT-G	Not Specified**	Multiple Pass	Not Specified**
	E6XT-GS, E7XT-GS	Not Specified**	Single Pass	Not Specified**

Notes:

Electrodes shown with grey background are specifically listed in AWS D1.1 as not prequalified, because they are designed for single-pass applications.

* The E7XT-11 electrodes can be used for multiple-pass welding, but are generally not recommended on thicknesses greater than ¾ in. thick. AWS D1.1 limits the use of prequalified WPSs with this electrode to applications involving materials ½ in. thick and thinner.

**The "general" classification categories are typically used for new filler metals for which a classification number has not been assigned. The characteristics of such electrodes and the properties of the deposited weld metal (other than yield, tensile, and elongation) are as agreed upon by the supplier and purchaser. The electrodes could be gas- or self-shielded, and may or may not have minimum specified CVN properties.

suitable for structural applications. Table 2–3 summarizes data from AWS A5.20:2005.

FCAW electrodes may contain a "-D" suffix in the classification. Such electrodes are required to additionally demonstrate the ability to deposit weld metal with a minimum CVN toughness of 40 ft-lb at +70 °F when tested with both high- and low-heat input procedures. These CVN requirements are often required of projects designed per the AISC Seismic Provisions.

2.3.5 FCAW Advantages and Limitations

The flux cored arc welding process offers two distinct advantages over shielded metal arc welding. First, the electrode is continuous, eliminating the built-in starts and stops that are inevitable with shielded metal arc welding. Not only does this have an economic advantage because the welder can continue welding until the weld is complete, but arc starts and stops, which create potential sources of weld discontinuities, are reduced.

The second major advantage is that increased amperages can be used with flux cored arc welding, with a corresponding increase in deposition rate and productivity. While the gun cable assembly may be 10 or more ft long, the electrical power is delivered to the tubular electrode near the point where it exits the gun. As the electrode passes through a hollow copper tube, called a contact tip, the electrical energy is transferred to the electrode. Then, current is transferred through the electrode until it gets to the arc.

The short distance from the contact tip to the arc is known as the electrode extension or "stickout" and is typically ¾ in. to 1⅛ in., although it may be as large as 2 or 3 in. Given that this distance is small, and that the electrode is typically fed through the contact tip at a rate of 200 in. per minute or more, there is little time for the electrode to overheat.

The higher permissible amperages allow for higher deposition rates (i.e., more pounds of metal can be deposited in a given length of time). Additionally, because of the continuous electrode, the arc can stay lit longer since there is no interruption to change electrodes. Combined, these two features make FCAW much more economical to use as compared to SMAW.

Because FCAW is semi-automatic, welders do not need to maintain the arc length—that is controlled by the machine. However, the welder must maintain the electrode extension

or "stickout" distance. The welder does not need to feed the filler metal into the joint — that is done by the wire feeder. Unlike the variable resistor associated with SMAW, FCAW has a fixed resistance (for a given electrode extension), and more uniform welding conditions are maintained. In some ways, less welder skill is required for FCAW welding. However, because of the higher deposition rates involved, FCAW welders must learn how to control the larger volumes of molten metal that are common to this process.

FCAW welding equipment costs more and is less portable than SMAW equipment. Guns and cables are more costly to buy and maintain than are the simple electrode holders used for SMAW. To change from one size of electrode to another, the welder has to change the coil or spool of electrode, perhaps change the drive rolls in the wire feeder, and make changes to the gun and cable assembly. Thus, as compared to SMAW, such changes are more complicated.

2.3.6 FCAW-G Advantages and Limitations

Comparing FCAW-G and FCAW-S, individual gas-shielded flux cored electrodes tend to be more versatile than self-shielded flux cored electrodes and, in general, provide better arc action. Operator appeal is usually higher. While the gas shield must be protected from winds and drafts, this is not particularly difficult in enclosed shop fabrication situations. Weld appearance and quality are very good. Higher-strength gas-shielded FCAW electrodes are available, while current technology limits self-shielded FCAW deposits to 90 ksi tensile strength or less.

Figure 2–15. FCAW-S application.

For structural applications, the primary limitations of FCAW-G are related to the need for shielding gas. AWS D1.1 limits the maximum wind velocity around an arc to 5 mph. A shelter or screen can be erected to limit such wind, if necessary. However, when welding is performed under windy conditions with FCAW-G, porosity is a likely result. Additionally, studies have shown that at wind speeds less than 5 mph, and before the onset of porosity, the mechanical properties of ductility and toughness may decrease (FEMA, 1997). Thus, AWS D1.8 has limited the maximum wind velocity to 3 mph.

2.3.7 FCAW-G Applications

The flux cored arc welding process has become the most popular semi-automatic process for structural steel shop fabrication. Production welds that change direction or are short, difficult to access, done out-of-position (e.g., vertical or overhead), or part of a short production run generally will be made with semi-automatic FCAW. Stiffeners and doubler plates, angles, brackets, and clips are routinely welded with FCAW-G.

2.3.8 FCAW-S Advantages and Limitations

For welding under field conditions where wind may disturb the gas shield, FCAW-S is ideal. Welds have been made under conditions simulating wind speeds of 10 mph without any harmful effects (FEMA, 1997). Some fabricators have found FCAW-S offers advantages for shop welding as well, particularly for relatively open fabrication shops (open shop doors, buildings without walls, etc.).

Because no external shielding gas is required, there is obviously no need for gas cylinders, hoses, and regulators and no need to move them around a shop or jobsite. Gas nozzles associated with FCAW-G can become plugged with welding spatter, while this is of no concern for FCAW-S. The gun and cable assembly is simpler and less obstructive for FCAW-S, making it more suitable for welding in some confined spaces.

2.3.9 FCAW-S Applications

Field erection of all kinds of building components is the domain of FCAW-S: moment connections, column splices, braces, and truss components are typical applications (Figure 2–15). Because of the compact size of FCAW-S guns, many T-K-Y connections in HSS construction are welded with FCAW-S.

2.3.10 FCAW-S Intermix Concerns

Different welding processes may be combined in a single joint for a variety of reasons. For example, tack welding may be done with SMAW, and the rest of the joint may be filled

with FCAW. Under most circumstances, such intermixing of processes causes no difficulty. However, FCAW-S poses a specific exception.

For most arc welding processes, the molten weld pool is shielded by shielding gas, slag, or a combination of the two. FCAW-S is different in that it produces very little shielding gas, but rather relies on the addition of large amounts of deoxidizers and denitrifiers to react with oxygen and nitrogen. Aluminum is the primary element used for this purpose, but titanium and zirconium may also be used.

The balance between aluminum and nitrogen, as well as carbon and other alloys, must be properly maintained to ensure that specified mechanical properties are obtained in the weld metal. Mixing welding consumables that derive their properties from different metallurgical mechanisms and alloy balances in a single joint creates the potential for negative interaction. While it has been shown that the effects on yield strength, tensile strength, and elongation are minor, CVN toughness may be significantly affected (FEMA, 1997, and Quintana, 1998).

When CVN toughness is specified and "mixed weld metal" is used, AISC Specification Section J2.7 requires that the combination be compatible. AWS D1.8 contains Annex II, entitled "Intermix CVN Testing of Filler Metal Combinations (where one of the filler metals is FCAW-S)." This Annex contains details of what filler metal combinations must be tested, as well as the testing methodology and acceptance criteria. When such tests are performed and acceptable results achieved, the combination can be intermixed without concerns about negative interaction.

SAW, FCAW-G, SMAW, and GMAW have all been intermixed in many applications over the years without any reports of negative interactions. Thus, such concerns are limited to situations where one of the materials is FCAW-S. FCAW-S welds may be intermixed with welds made with other FCAW-S electrodes, again, without risk of negative interactions—providing that both electrodes have minimum specified CVN toughness requirements.

2.4 SAW

2.4.1 Fundamentals

Submerged arc welding (SAW) uses an arc, or arcs, between one or more bare electrodes and the weld pool(s), shielded by a blanket of granular material called flux that is used to shield the molten metal (Figure 2–16). Because the arc is completely covered by the flux (i.e., it is "submerged"), it is not visible and the weld is made without the flash, spatter, and sparks that characterize the open-arc processes. The nature of the flux is such that very little smoke or visible fumes are emitted under normal conditions.

Typically, SAW is used automatically, although semi-automatic operation is also utilized. In automatic welding, the electrode is automatically positioned with respect to the joint and also is automatically propelled along the length of the joint (Figure 2–17). In the semi-automatic version of the process, the welder orients the electrode with respect to the joint, and also moves the welding gun along the weld joint.

SAW is most commonly used with one electrode, although it is possible to use more. Two electrodes may be fed through a single electrical contact tip, and this is formally called parallel electrode welding. When two or more separate, individually controlled arcs are used, the configuration is formally known as multiple electrode welding, although it is often called tandem arc welding.

The granular flux must stay in place to shield the weld pool, and thus, SAW is restricted to the flat and horizontal welding positions.

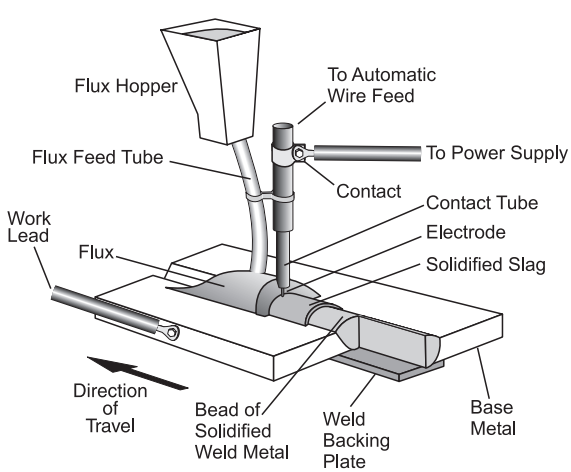

Figure 2–16. SAW process.

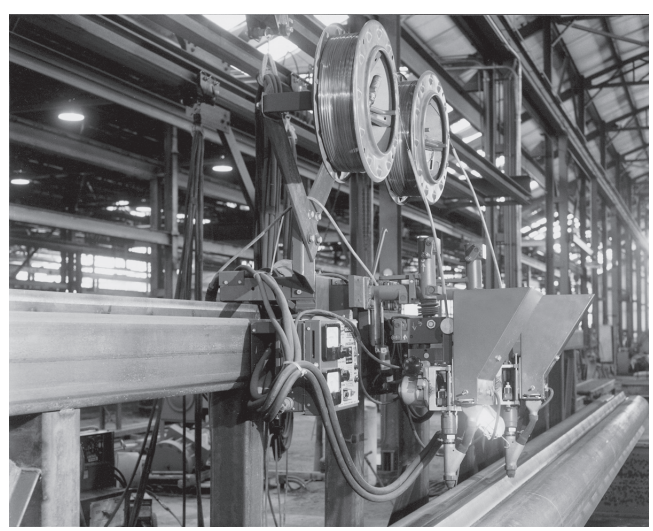

Figure 2–17. Automatic SAW.

SAW is one of the prequalified processes listed in AWS D1.1, and the WPSs used with this process can be prequalified, providing all the criteria of Section 3 of AWS D1.1 are met.

2.4.2 Equipment

Like FCAW, SAW equipment consists of a power source, a wire feeder, a device through which the electrode is fed and electrical power is introduced, and a work lead and clamp. The power supply can be either constant current or constant voltage, and SAW can be performed with either direct or alternating current. In the more common automatic mode, the electrode is propelled along the joint in a mechanized system, or the work is moved under a fixed welding head. In semi-automatic welding, the welder moves the gun along the joint. The mechanized systems range from simple systems that move a semi-automatic gun along the joint to self-contained wire-feeder/motion-control systems typically called tractors (Figure 2–18). Welding fixtures are typically required when the work is moved under a fixed head, and such systems may become quite large and complex, depending on the nature of the work being done.

SAW additionally requires a flux delivery system. For many applications, a simple hopper allows the flux to be delivered by gravity. For semi-automatic applications, a pressurized container is used, and the flux is delivered by means of compressed air (Figure 2–19), which must be clean and dry, or the flux will become contaminated.

Multiple-electrode SAW refers to a variation of submerged arc that utilizes at least two separate power supplies and two separate wire drives, and feeds two electrodes independently. Some applications, such as the manufacture of line pipe, may use up to five independent electrodes in a multiple-electrode configuration.

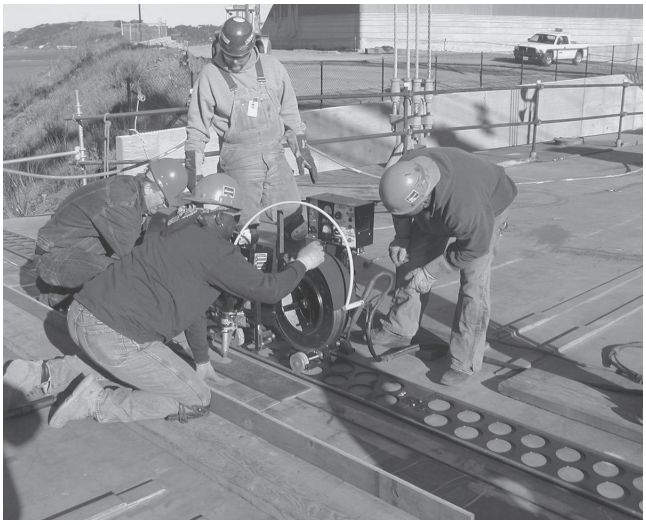

Figure 2–18. SAW with tractor.

2.4.3 SAW Consumables

Consumables for SAW consist of electrodes and fluxes. Electrodes typically are solid but may be tubular with metal powders or flux ingredients inside. Solid electrodes usually contain a thin coating of copper, which aids in electrical conductivity as the wire passes through the contact tip. For structural steel fabrication, typical electrode diameters range from 1⁄16 to 3⁄16 in., although both larger and smaller electrodes are used. Fluxes are granular materials that are also consumed, forming the slag coating on top of the completed weld.

Fluxes may be categorized based on the means of manufacture. Fused fluxes are made by melting a mixture of materials, allowing the mix to melt, and then breaking the glass-like mass into small particles. Bonded fluxes, also called agglomerated fluxes, are made by mixing various dry ingredients with a silicate binder, forming pellets that are subsequently baked. The baked pellets are then broken up, sized, and packaged. Agglomerated fluxes have the advantage of permitting the addition of deoxidizers and alloying elements that cannot withstand the melting cycle associated with fused fluxes. However, fused fluxes are more resistant to moisture absorption.

Fluxes may also be classified as active or neutral. Active fluxes contain deliberate additions of manganese and silicon and are primarily designed for single- or limited-pass welding. When the flux melts, some of the alloy in the flux becomes part of the weld metal. These ingredients enable welding on materials with heavy rust and scale and also make single-pass welds more crack resistant. Neutral fluxes, on the other hand, are designed primarily for multiple-pass

Figure 2–19. Pressurized SAW flux delivery system.

welds and do not significantly change the manganese or silicon content of the weld metal.

The amount of flux that is melted per pound of weld deposit is dependent on the arc voltage—the higher the voltage, the more flux is melted. With active fluxes, and when used for multiple-pass applications, high voltages can lead to alloy buildup in the weld deposit, resulting in high strength, but crack-sensitive welds. However, when voltage changes are made with neutral fluxes, the composition of the weld deposit does not appreciably change.

Alloy flux is another distinct type of shielding material, made by adding specific alloys to the flux. When the flux is melted, the alloys are transferred to the weld. Thus, a carbon steel electrode can be used, and an alloy deposit obtained. One such application is ASTM A588 weathering steel, where alloy fluxes are routinely used, introducing nickel into the deposit to provide atmospheric corrosion resistance.

2.4.4 Electrode and Flux Classification

Submerged arc welding filler materials are classified under AWS A5.17 for carbon steel and AWS A5.23 for low-alloy filler metals. Both fluxes and electrodes are covered under these specifications. Since SAW is a two-component process, that is, flux and electrode, the classification system is slightly different than for other filler materials.

SAW electrodes are typically solid, but composite electrodes are also used. Solid electrodes are classified based on the composition of the wire, whereas composite electrodes are classified on the deposit chemistry. Under AWS A5.17, the electrode will carry a classification that consists of two letters, one or two numerical digits and, in some cases, a final letter. The first letter is an E, which stands for electrode. The second letter will be L, M, or H, referring to a low, medium, or high level of manganese in the electrode. The next one or two digits refer to the nominal carbon content in hundredths of a percent. A "12" in this location, for example, indicates a nominal carbon content of 0.12 percent. It should be emphasized that this is the nominal value, and it is possible to have higher and lower carbon contents in a specific electrode. In some instances, the electrode will be made of killed steel. When this is the case, silicon normally is added and the electrode will have a "K" at the end of the classification (e.g., EM13K). Composite electrodes will contain a "C" after the "E" in the electrode designation.

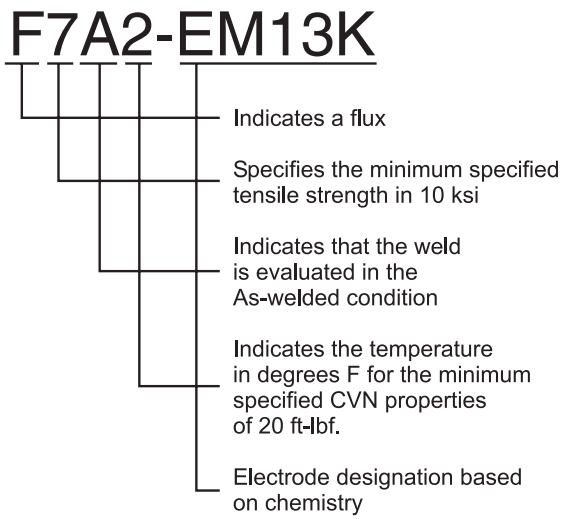

Figure 2–20. Flux-electrode classification system.

Electrodes classified under AWS A5.23, the low-alloy variety, have a more complex nomenclature, because of the variety of alloys that may be involved. The most important alloys for structural welding are the "Ni," or nickel alloys, and "W," or weathering alloys (e.g., ENi1K).

Fluxes are always classified in conjunction with an electrode. The flux-electrode combination must meet specific mechanical property requirements. After a flux is selected and a classification test plate welded, a flux-electrode classification may be established. Specimens are extracted from the weld deposit to obtain the mechanical properties of the flux-electrode combination. The classification will follow the format of an "F" followed by a single- or two-digit number, an "A" or "P," a single digit, and a hyphen that separates the electrode classification. Thus, a typical flux-electrode may be classified as an F7A2-EM13K. The "F" stands for flux, and the "7" indicates all of the following: a 70- to 95-ksi tensile strength deposit, a 58-ksi minimum yield strength, and a minimum of 22 percent elongation. The "A" indicates that the deposit is tested in the as-welded condition. The "2" indicates a notch toughness of 20 ft-lb at –20 °F (where the "2" in the classification is a reference to the temperature), and the balance of the classification identifies the electrode used.

Because of the popularity of the SAW process for pressure vessel fabrication where assemblies are routinely stress relieved, submerged arc products may be classified in the post-weld heat-treated, or stress-relieved, condition. When this is done, a "P" replaces the "A." For structural work, which is seldom stress relieved, the "A" classification is more common.

For products classified under AWS A5.23, a format similar to that of AWS A5.17 is used, with this major exception: at the end of the flux-electrode classification, a weld deposit composition is specified (Figure 2–20). For example, an F7A2-ENi1-Ni1 indicates that the electrode, an ENi1, delivers an F7A2 deposit when used with a specific flux. In addition, the deposit has a composition that meets the requirements of Ni1. In this case, a nickel-bearing electrode deposits a weld that contains nickel. The example is straight-

forward. However, it is also possible to use alloy fluxes that, with carbon steel electrodes, are capable of delivering alloy weld metal. In this case, a typical classification may be an F7A2-EL12-Nil. In this example, an EL12 electrode (a non-alloy electrode that contains a low level of manganese) is used with an alloy flux. The result is an alloyed deposit. This is commonly done when nickel-bearing deposits are desired on weathering steel that will not be painted.

2.4.5 Flux Recovery

Only part of the flux deposited from a hopper or a gun is fused in welding. The unfused, granular flux may be recovered for future reuse and is known as recovered flux. The unmelted flux does not undergo chemical changes and may therefore be capable of delivering quality welds when used the next time. However, this flux can be contaminated in the act of recovery. If it comes in contact with oil, water, dirt, or other contaminants, the properties of the weld deposit made with reclaimed flux may be adversely affected. Loose scale can also be picked up along with the unfused flux. Therefore, care should be taken to protect reclaimed flux from contamination. Another concern with reclaimed flux is the potential for the breakdown of particles and the modification of the particle size distribution; either can affect the quality and/or properties. The method of flux recovery can range from sweeping up the flux with brooms and pans, to vacuum recovery systems (Figure 2–21); the method chosen should take into account the need to avoid contamination.

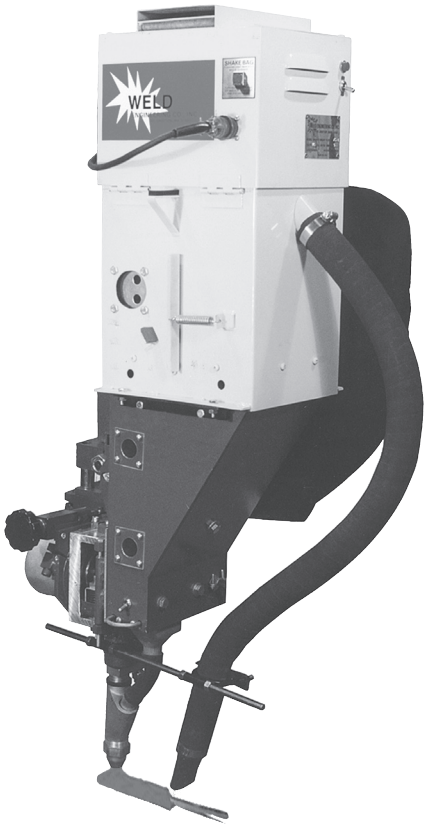

Figure 2–21. Flux vacuum recovery system. (courtesy of Weld Engineering)

2.4.6 Crushed Slag

After the flux has melted and solidified, the resulting product is called slag. Slag is typically chemically different than the unfused flux. However, this welding byproduct can be crushed and reused in some applications. When this is done, the product is known as crushed slag. It should not be treated in the same manner as virgin flux. Often, crushed slag is intermixed with new flux. Performance and mechanical properties of crushed slag may differ from those of virgin flux. AWS D1.1 contains specific procedures for the use of crushed slags.

2.4.7 Process Advantages and Limitations

SAW is capable of high productivity rates because it can use higher welding currents, resulting in higher deposition rates and deeper penetration. Higher deposition rates simply mean that the contractor can deposit the required weld in less time. The deeper penetration may allow fillet-weld sizes to be reduced, or may permit the use of groove-weld details that require less weld metal. For even higher deposition rates, a second or third electrode can be added into the system to increase productivity further. Because the process typically is automated, SAW welds usually are made continuous for the length of the joint.

Welds made under the protective layer of flux are excellent in appearance and spatter-free. This is of particular significance for steel designated as architecturally exposed structural steel (AESS) where the completed SAW weld rarely requires any post-weld treatment to enhance its appearance.

Another benefit of the SAW process is freedom from the open arc. This means that the welder is not required to use the standard protective helmet, and multiple welding operations can be conducted in a tight, restricted area without the need for extensive shields to guard the operators from arc flash. The process produces very little smoke, which is another production advantage, particularly in situations with restricted ventilation.

The freedom from the open arc also proves to be one of the chief drawbacks of the process; it does not allow the operator to observe the weld puddle. When SAW is applied semi-automatically, the operator must learn to propel the gun carefully in a manner that will ensure uniform bead contour. The experienced operator relies on the formation of a uniform slag blanket to indicate the nature of the deposit underneath it. For single-pass welds, this is mastered fairly readily; however, for multiple-pass welding, the degree of

skill required is significant. Therefore, most submerged arc applications are mechanized.

The nature of the joint must then lend itself to automation if the process is to prove viable. Long, uninterrupted, straight seams are ideal applications for SAW. Short, intermittent welds are better made with one of the open-arc processes.

Finally, SAW is restricted to the flat and horizontal position. For shop fabrication, the use of positioners, or simple reorientation of the weldment, can facilitate in-position welding. However, field conditions prohibit such opportunities, and thus restrict the suitability of SAW.

2.4.8 Applications

Because of its advantages, many fabricators will use SAW anywhere it is practical. Typical applications include the longitudinal seams on plate girders, box sections, and cruciform columns. In bridge shops, butt splices of flanges and webs are typically made with SAW, as are the stiffener-to-web welds.

2.5 GMAW

2.5.1 Fundamentals

The gas metal arc welding (GMAW) process utilizes an arc between a typically solid electrode and the weld pool, with a shielding gas that surrounds the arc (Figure 2–22). The process and equipment are very much like FCAW-G. GMAW uses a solid- or metal-cored electrode and leaves no appreciable amount of residual slag. Historically, GMAW has not been a common method of welding in the structural steel fabrication shop because of its sensitivity to mill scale, rust, limited puddle control, and shielding loss. However, developments such as metal-cored electrodes and improved controls for pulsed GMAW are resulting in increased use of this process for structural steel.

GMAW has a variety of colloquial names, including the popular term MIG (metal inert gas) welding, and others such as mini-wire welding, micro-wire welding, and solid-wire welding. When GMAW is performed with carbon dioxide (CO_2) shielding gas, it may be referred to as MAG (metal active gas) welding.

The transfer of metal from the electrode to the weld pool may occur in several manners, called transfer modes. While a dozen or so transfer modes have been defined, four are commonly used in structural applications. These modes of transfer will be discussed separately.

GMAW is one of the prequalified processes listed in AWS D1.1, and the WPSs used with this process can be prequalified, providing all the criteria of Section 3 of AWS D1.1 are met. As an exception, GMAW-S (the short circuit transfer mode discussed below) may not be used with prequalified WPSs. GMAW-S is in the category of "code-approved" processes.

2.5.2 Equipment

GMAW, like FCAW, requires a power supply, a wire feeder, a gun and cable system, a work lead and clamp, and a power lead that runs from the power source to the wire feeder (Figure 2–23). Some GMAW power supplies and wire feeders are combined into one self-contained housing (Figure 2–24). Additionally, a shielding gas regulator and flow meter, and hoses are required. GMAW is performed using a constant voltage (CV) power supply. The wire feeder mechanically drives the coiled electrode through the gun and cable system. Gun cable assemblies are typically 10 to 15 ft long, allowing for some movement of the gun from the wire feeder.

GMAW and FCAW equipment is similar enough that in many cases it is used interchangeably. GMAW power supplies may have additional controls for optimizing the output characteristics for certain modes of transfer.

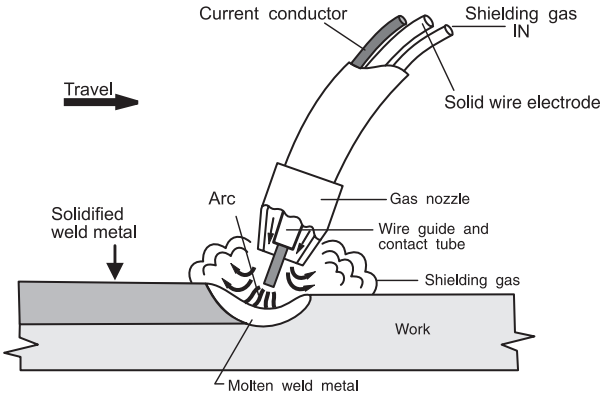

Figure 2–22. GMAW process.

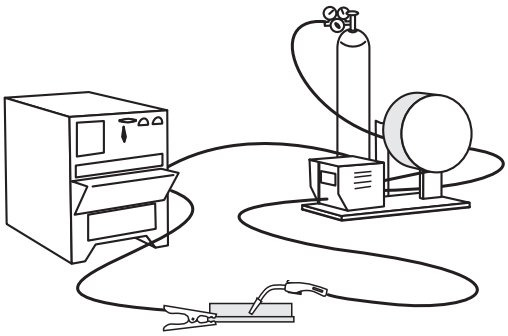

Figure 2–23. GMAW equipment.

2.5.3 Consumables

Most GMAW is performed with solid electrodes, although metal-cored composite electrodes may be used. The solid electrodes are normally 0.035 to 0.052 in. in diameter, and metal-cored electrodes are typically 0.045 to 1⁄16 in. in diameter. However, in both cases, smaller and larger electrodes can and have been used. GMAW solid electrodes typically have a light copper plating on the surface to improve electrical contact between the wire and the contact tip.

Metal-cored electrodes are a newer development in gas metal arc welding. These are similar to flux-cored electrodes in that both are tubular, but the core material for metal-cored electrodes does not contain slag-forming ingredients. The resulting weld is virtually free of slag, just as with other forms of GMAW. The use of metal-cored electrodes offers many fabrication advantages. They have increased ability to handle mill scale and other surface contaminants. For a given current (amperage), metal-cored electrodes offer higher deposition rates than solid electrodes. However, metal-cored electrodes are, in general, more expensive than the solid electrode alternative.

2.5.4 Electrode Classification System

GMAW electrodes are covered by AWS A5.18 and AWS A5.28 filler metal specifications, with the former addressing carbon steel electrodes and the latter dealing with low-alloy steel electrodes. For solid electrodes, the classification is based on the electrode composition, whereas for metal-cored electrodes, the weld deposit is the basis of the chemistry control. In either case, the mechanical properties are based on tests made on deposited weld metal.

Figure 2–25 illustrates the GMAW electrode classification system. The ER70S-3 denotes a solid electrode capable of depositing weld metal with a 70-ksi minimum specified tensile strength, and CVN toughness of 20 ft-lb at 0 °F is indicated. If a metal-cored electrode were specified, a "C" would replace the "S," and the "R" would not be used.

Figure 2–24. Self contained GMAW wire feeder/power supply.

2.5.5 Shielding Gas

A variety of shielding gases or gas mixtures may be used for GMAW. The selection of gas type primarily depends on the desired mode of metal transfer and cost. Carbon dioxide (CO_2) is the lowest cost gas, but it cannot be used for spray and pulsed spray transfer. Also, welding with pure CO_2 typically results in high spatter levels. Argon-based mixtures of gas can be used for all modes of transfer and generate less spatter, but are considerably more expensive. The selection of the shielding gas can affect the weld penetration and penetration profile.

Carbon dioxide is not an inert gas at high temperatures; rather, it is chemically active. This has given rise to the term MAG (metal active gas) for the process when CO_2 is used and MIG (metal inert gas) when predominantly argon-based mixtures are used.

For GMAW, pure argon shielding gas is not used, but rather, small quantities of CO_2 or oxygen, or both, are added. While shielding gas is used to displace atmospheric nitrogen and oxygen, it is possible to add lesser quantities of oxygen into mixtures of argon—generally at levels of 2 to 8 percent. This helps stabilize the arc and decreases puddle surface ten-

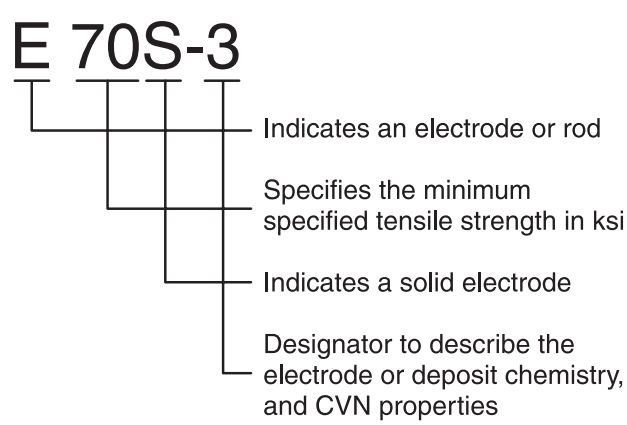

Figure 2–25. GMAW electrode classification system.

Table 2–4. Typical GMAW-S Amperage Levels		
Electrode Diameter	**Minimum Amperage**	**Maximum Amperage**
0.030 in.	50	150
0.035 in.	75	175
0.045 in.	100	225

sion, resulting in improved wetting. Tri- and quad-mixes of argon, oxygen, carbon dioxide, and helium are possible, offering advantages such as improved arc action, better deposit appearance, and reduced fume generation rates.

The shielding gas may influence the properties of the deposited weld metal. The suitability of the specific gas mixture and the specific filler metal being used should be verified. Such documentation is typically available from the electrode manufacturer or gas supplier.

2.5.6 Modes of Transfer

There are a variety of modes of metal transfer associated with GMAW. Commercially, only four are popular for structural steel fabrication. Normally, the issue of the mode of transfer would be considered simply one of the contractor's issues of means and methods. However, the engineer should be aware that one mode of transfer, short circuit, poses some unique concerns.

The following modes of transfer will be discussed: short-circuit transfer, globular transfer, spray transfer, and pulsed spray transfer.

Short-Circuit Transfer

Short-circuit transfer is a GMAW mode of transfer wherein metal is transferred from the electrode to the weld pool through a series of repeated electrical short circuits. It is abbreviated as GMAW-S and is a low-energy mode of transfer, ideal for welding on thin-gauge materials. It is the only suitable mode of transfer for all-position welding, unless pulsed spray transfer is used (which requires more specialized equipment). GMAW-S is generally not suitable for structural steel fabrication purposes. This mode of transfer is sometimes called short arc welding.

In this mode of transfer, the small-diameter electrode, typically 0.035 or 0.045 in., is fed at a moderate wire feed speed with relatively low arc voltages. The electrode will touch the workpiece, resulting in a short in the electrical circuit. The arc will actually go out at this point, and very high currents will flow through the electrode, causing it to heat and melt. Just as excessive current flowing through a fuse causes it to blow, so the shorted electrode will heat and melt, eventually separating from the work and initiating a momentary arc. A small amount of metal will be transferred to the work at this time.

This cycle will repeat itself again once the electrode shorts to the work. This occurs somewhere between 20 and 200 times per second, creating a characteristic buzz to the arc. This mode of transfer is ideal for sheet metal, but results in significant fusion problems if applied to heavier materials. A phenomenon known as cold lap or cold casting may result where the metal does not fuse to the base material. This is unacceptable since the welded connections will have virtually no strength.

Great caution must be exercised when applying the short arc mode to heavy plates or material with thick scale. The use of short-circuit transfer on heavy plates is not totally prohibited by AWS D1.1, however, since it is the only mode of transfer that can be used out-of-position with gas metal arc welding, unless specialized equipment is used. Weld joint details must be carefully designed when GMAW-S is used. Welders must pass specific qualification tests before using this mode of transfer, and it is *not* prequalified in AWS D1.1. Thus, all WPSs for GMAW-S must be qualified by test.

It is difficult to determine when GMAW is and is not being performed with the short circuiting mode of transfer. The fundamental concern is not whether the mode is GMAW-S or something else such as globular transfer (discussed below) but rather, whether fusion is being achieved. Annex A of AWS D1.1 provides a table listing amperage ranges typical for short circuiting transfer for various electrode diameters and positions of welding. Table 2–4 is a summary created from the AWS D1.1 table.

It is reasonable and conservative to assume that if the welding current for a given diameter of electrode is below the maximum value shown above, GMAW-S is being used. If so, the WPS should be qualified by test before it is used on structural steel applications that are thicker than 3⁄16 in.

If GMAW is done in the vertical or overhead position, and if pulsed spray equipment is not being used, then the transfer mode is automatically GMAW-S.

Globular Transfer

Globular transfer is a mode of transfer wherein molten metal leaves the electrode in large drops (globs) that are transferred to the weld pool. This GMAW mode occurs when high concentrations of carbon dioxide shielding gas are used. Globular transfer is characterized by deep penetration and relatively high levels of spatter. Weld appearance can be poor and it is restricted to the flat and horizontal position. Globular transfer may be preferred over spray transfer

because of the low cost of CO_2 shielding gas and the lower level of heat felt by the operator.

Spray Transfer

Spray transfer, as shown in Figure 2–26, is a mode of transfer in which a fine spray of molten drops, all smaller in diameter than the electrode diameter, are transferred from the electrode toward the weld pool. Spray transfer is characterized by high wire-feed speeds at relatively high voltages, and a high level of energy is transferred to the work. As a result, spray transfer is restricted to the flat and horizontal positions. High-quality welds with particularly good appearance are the result. Spatter is practically nonexistent with spray transfer.

The shielding used for spray-arc transfer is composed of at least 80 percent argon, with the balance made up of either carbon dioxide or oxygen. Typical mixtures include 90-10 argon-CO_2, and 95-5 argon-oxygen. Other proprietary mixtures are available from gas suppliers.

Pulsed Spray Transfer

Pulsed spray transfer utilizes a background current, which is continuously applied to the electrode, and a pulsing peak current that momentarily forces spray transfer. Metal transfer occurs during the pulse. The pulsing rate is optimally applied as a function of the wire feed speed, and ideally, a single droplet of metal is transferred by the pulse. The power supply then delivers a lower background current, which maintains the arc. This occurs between 100 and 400 times per second. This mode of transfer is sometimes abbreviated as GMAW-P, and may be called pulsed arc.

One advantage of pulsed spray transfer is that it can be used out-of-position. For flat and horizontal work, it may not be as fast as spray transfer. However, used out-of-position, it is free of the problems associated with the short circuiting mode. Weld appearance is good and quality can be excellent. The disadvantage of pulsed arc transfer is that the equipment is more complex and costly than that required for other modes of transfer. However, with new equipment advances, the machines have become easier to use and the popularity of this mode of transfer is increasing.

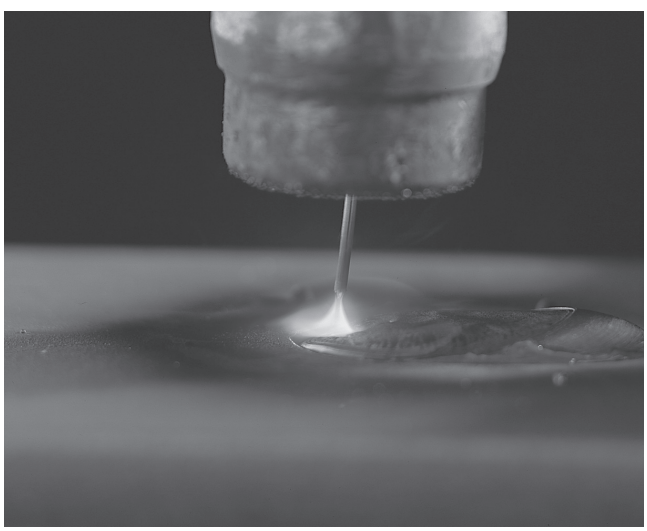

Figure 2–26. GMAW spray transfer.

2.5.7 Process Advantages and Limitations

GMAW, regardless of the mode of transfer, has some inherent advantages and limitations that will be presented first. Because no slag covers the weld, cleanup after welding is simple and low cost. GMAW electrodes typically cost less than flux-cored electrodes. GMAW has all the previously cited advantages of semi-automatic and automatic processes. GMAW with solid electrodes is capable of depositing weld metal with very low levels of diffusible hydrogen.

An overall limitation of GMAW, regardless of mode, is that the process is more sensitive to contaminants that might be present on the steel surface, including mill scale, rust, and oil. GMAW can handle some of these contaminants, but other processes with slag systems can typically tolerate greater levels of such materials. Porosity may result when surfaces are too contaminated, and heavy scale may inhibit fusion.

As a gas-shielded process, GMAW has the same limitations as does FCAW-G: If the gas shield is disturbed, porosity will result. Even before the onset of porosity, the mechanical properties of the weld deposit, specifically the ductility and toughness, may deteriorate (FEMA, 1997).

Additional advantages and limitations of GMAW depend on the mode of transfer. Spray transfer permits higher deposition rates and deposits welds with good appearance, but requires the use of the higher cost argon-based shielding gas mixtures and can be used only in the flat and horizontal positions.

Globular transfer uses low-cost carbon dioxide shielding and offers high deposition rates, but weld appearance is inferior to spray transfer, and extensive spatter is typical. The mode is also restricted to the flat and horizontal positions.

Short circuit transfer is ideal for sheet metal, and while it can be used out-of-position (vertical and overhead), the strong tendency toward fusion defects makes it undesirable for most structural applications.

Pulsed spray arc permits all-position welding and deposits welds with good appearance. Like spray transfer, this mode requires the use of the more expensive argon-based shielding gas mixtures. The welding equipment is more expensive and complex, but technical advances in power source controls have simplified the user interfaces.

2.5.8 Applications

GMAW is not widely used in the structural steel fabrication industry in the United States, but both solid and metal-cored electrodes have been used for shop fabrication of a variety of miscellaneous applications. Typically, but not exclusively, the welds are limited to single-pass situations. A major user of GMAW is the metal building industry, where nearly all semi-automatic welding is done with this process. Because it offers freedom from slag, GMAW is often used for tack welding.

2.6 ESW/EGW

2.6.1 Fundamentals

Electroslag welding (ESW) is a resistance welding process wherein a solid or tubular electrode is fed through an electrically conductive, hot slag that melts the electrode, adding metal to the weld pool (Figure 2–27). Electrogas welding (EGW) is a welding process that utilizes an arc between an electrode and the weld pool, with a shielding gas that protects the weld pool (Figure 2–28). Both processes are used for vertical-up welding, with the weld pool contained by backing on the sides of the weld. Groove welds in butt and T-joints are the most common applications for these processes. The welds are completed in a single pass.

A relatively recent modification of ESW has been introduced, commonly called "narrow gap improved electroslag welding" or NGI-ESW, renewing interest in the process, particularly for bridge welding applications.

Although ESW and EGW are used in similar applications, the means by which their electrodes are melted is fundamentally different. Electroslag and electrogas are mechanically similar in that both utilize backing to contain the weld metal in the joint. Such backing may be copper or steel. When copper is used, the backing is often called a dam or shoe, is typically water cooled, and is removed from the joint after the weld has solidified and cooled. When steel backing is used, it is fused to the weld and is typically left in place, becoming part of the weldment.

ESW is not an arc welding process, but a resistance welding process. Initially, when ESW is started, it functions like SAW; an arc buried under the flux melts the base metal, filler metal, and flux, forming a slag. Unlike SAW, the slag for ESW is electrically conductive. After a slag blanket is established, the electrical current is conducted from the electrode, through the slag, and into the workpiece. The high currents transferred through the slag keep it hot. As the electrode is fed through this hot slag, it melts, and molten metal drips from the electrode into the weld pool. No arc is involved, except when the process is started.

EGW is more like GMAW in a vertical orientation. An electrode is fed through a conductor, and an arc is established between the electrode and the weld pool. A shielding gas protects the weld pool. Throughout the process, the arc is established with EGW. Electrogas is a popular welding process in Asia, but in the United States, ESW is more common.

A third process, or process variation, exists that combines features of both ESW and EGW. It is an arc-welding process like EGW but requires no shielding gas. Like ESW, it involves slag, which originates as a flux inside a cored electrode. It is typically designated as EGW without gas.

The previously mentioned process variation of NGI-ESW utilizes a cored electrode, and a weld root opening that is smaller than has been traditionally applied. A specially designed electrode guide is also employed. Designed specifically for bridge applications, the variation has mitigated

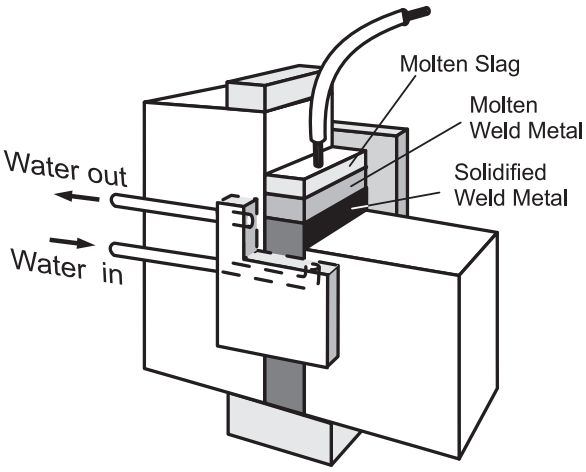

Figure 2–27. ESW process.

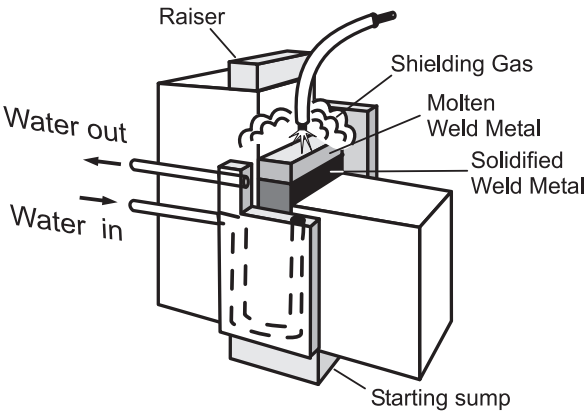

Figure 2–28. EGW process.

some of the shortcomings of traditional ESW. It is has also been used for non-bridge applications where there are requirements for weld or HAZ notch toughness requirements.

ESW and EGW are examples of the "code-approved" processes listed in AWS D1.1, and the WPSs used with this process must be qualified by test.

2.6.2 Equipment

Equipment for ESW/EGW consists of a power supply, wire feeder, flux delivery system (for ESW) or gas delivery system (for EGW), appropriate power and work leads and connections, an apparatus to support the electrode with respect to the joint, and fixturing to hold the backing/dams in position. Water-cooled copper shoes need a source of cooling water.

2.6.3 Consumables

Consumables for ESW consist of solid or cored electrodes and fluxes. In some process variations, consumable guide tubes are used. EGW consumables include solid or metal cored electrodes and shielding gas.

2.6.4 Electrode Classification

Fluxes and electrodes for ESW are covered by AWS A5.25, while AWS A5.26 addresses electrodes for EGW. Like SAW, ESW involves two components: flux and electrode. Solid ESW and EGW electrodes are classified based on the composition of the electrode. Cored electrodes for these processes are classified based on the deposited weld metal chemistry. Mechanical property requirements are based on tests made from deposited weld metal.

ESW flux-electrode combinations have classifications that follow the pattern shown in Figure 2–29. For EGW, a somewhat similar pattern is followed, as depicted in Figure 2–30.

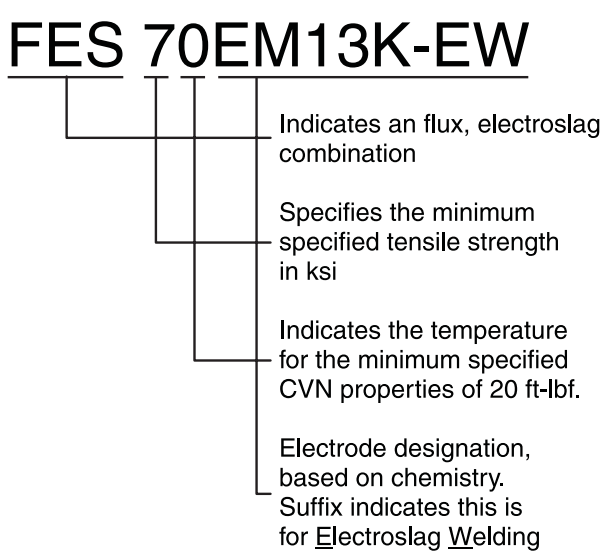

Figure 2–29. ESW flux-electrode classification system.

2.6.5 Process Advantages and Limitations

Very high deposition rates can be obtained with ESW/EGW, leading to productivity gains. Normally, the joint details involve square edge preparations, eliminating plate beveling costs. In some cases, material handling is reduced—plates do not need to be flipped as is the case for double-sided welds made with SAW, for example. Angular distortion can be reduced, as compared to single-sided welds in V and bevel grooves.

An important advantage of ESW/EGW is the ability to weld into "blind" joints. A prime example is the welds of diaphragm plates in box columns. It is possible to fabricate an open box, that is, tie three plates together in a U-shape, and then to weld the diaphragm plates into the three sides with a variety of processes. However, once the box is closed by adding the fourth side, the final seam of the diaphragm plate to the column cannot be made, due to access restrictions. However, it is possible with ESW/EGW to weld through a hole in the box, thereby making a weld in an otherwise inaccessible location.

These processes are ideal for thicker materials, and typical applications are 1 in. thick or greater. Materials 12 in. thick and greater have been welded with ESW using multiple electrodes. The processes are not well suited for use on thinner materials, however.

The equipment and associated fixturing are more expensive and less flexible than those associated with other processes.

Because of the sensitivity of the process to the variety of variables involved, specific operator training is required, and AWS D1.1 requires that all ESW/EGW welding procedure specifications be qualified by test. Like all processes, ESW/

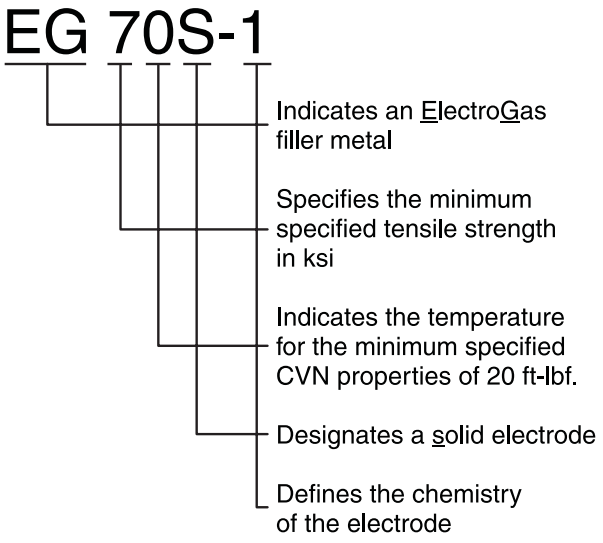

Figure 2–30. EGW electrode classification system.

EGW must be controlled to obtain welds with the required quality. ESW/EGW have the advantage of being automatic processes, and when they are properly set up, consistently good results can be obtained. However, different variables are involved as compared to other processes. Fit of the copper shoes to the work, the temperature of the shoes, and the thickness of the slag layer are all factors that must be controlled in order to obtain quality welds.

Due to the high levels of heat input, often 10 times or more than that of SAW, the heat-affected zone (HAZ) is large. Low CVN toughness of welds and HAZs has been an ongoing problem associated with these processes, although new developments have mitigated these concerns.

2.6.6 Applications

ESW/EGW have niche applications within the structural steel fabrication industry. They can be highly efficient in the manufacture of tree columns. In the shop, the beam flange-to-column welds can be made with the column in the horizontal plane. With the proper equipment and tooling, all four flange welds can be made simultaneously.

The welds that join continuity plates to columns can be made with ESW/EGW, as can column-to-base plate welds and column cap welds. As has been mentioned, another common application is for the welding of continuity plates inside box columns.

For bridge fabrication, flange splices effectively can be made with these processes, including transition joints involving materials of different thicknesses. However, because of problems in the past, ESW/EGW were restricted to compression members for many years. With the advent of the narrow-gap alternative, such restrictions are being reduced, and applicable codes are being modified to reflect these changes.

2.7 GTAW

Gas tungsten arc welding (GTAW) utilizes an arc between a nonconsumed tungsten electrode and the weld pool, with a shielding gas that protects the hot tungsten and the weld pool (Figure 2–31). Filler metal, if used, is added externally—either manually or automatically. The process is often referred to by the slang name of TIG, which stands for tungsten inert gas.

In the structural steel field, GTAW is typically used for only specialized applications. It is commonly used to weld aluminum and stainless steel, and can be used to make high-quality root pass welds on tubing and pipe made of these material, as well as carbon and low-alloy steels. GTAW is very slow and, accordingly, welds made with the process are expensive. The process tends to be used only when no other viable alternative process options exist.

GTAW is a "code-approved" process in AWS D1.1, and the WPSs used with this process must be qualified by test.

2.8 ARC STUD WELDING

In arc stud welding, an arc is established between a metallic stud and the workpiece. After the arc is initiated, pressure is applied to the stud, which is pressed into the weld pool. Most of the molten metal and contamination is expelled from the weld area as the stud is mechanically forced into the weld pool. Some shielding of the arc and the weld pool is accomplished by means of a ferrule, typically ceramic, which surrounds the stud. A small pellet on the end of the base end of the stud provides some deoxidizers. Arc stud welding, frequently referred to simply as stud welding, is used to attach headed shear stud connectors to beams to facilitate composite action. Studs can be applied through decking,

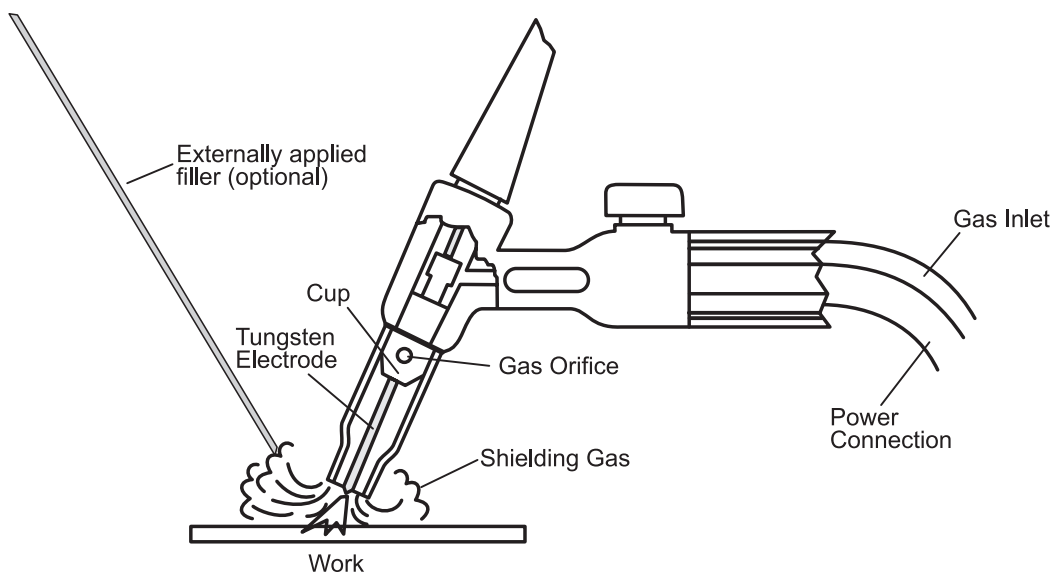

Figure 2–31. GTAW.

accomplishing the dual purpose of attaching the decking and the stud in one operation (Figure 2–32).

Arc stud welding is automated and fairly simple to use. The keys to obtaining a quality weld are to weld on relatively clean materials, use studs that are clean, and obtain the proper balance between welding current and arcing time. Generally, welded studs are visually inspected to ensure that weld flash surrounds the perimeter. When current is too low, or time too short, the flash typically will not extend around the whole stud. Conversely, when the current is too high, or the time too long, the flash may extend a long way beyond the ferrule, or may undercut the stud itself.

To ensure that proper procedures are used, AWS D1.1 requires that at the beginning of a production shift, or before welding with a given equipment set-up, the first two studs are tested by mechanically bending them over to an approximate 30° angle from the original stud axis. This is accomplished by striking the stud with a suitable hammer, or by inserting a pipe or other hollow device around the stud and bending it. A good weld will allow for such deformation and will not break. Poor procedures will typically cause the stud to break from the beam in the weld region. Because the studs will be buried in concrete, tested studs are not routinely straightened afterwards.

Studs that do not have flash for the full 360° perimeter may be repaired by using one of the arc welding processes, such as SMAW or FCAW, and applying a fillet weld around the perimeter. Then, such studs are bent 15°, not 30°, to prove their adequacy.

Figure 2–32 . Automatic stud welding. (courtesy of Nelson Stud Welding)

Stud welding is addressed in Section 7 of AWS D1.1, separate from other welding processes. The process, which is not used to join primary members together, does not fit into the AWS D1.1 "prequalified" or "code approved" listings that have been discussed. However, stud welding may be used under the conditions listed in Section 7 of AWS D1.1 without procedure qualification testing. The previously mentioned testing of production welds ensures that proper procedures are used.

2.9 THERMAL CUTTING PROCESSES

Inherent to steel fabrication is the need to cut shapes, plates, and bars into pieces of the proper size. Cutting may be done mechanically with saws, shears, punches, and nibblers, or it may be done with a variety of thermal cutting processes. In addition to cutting the primary members, weld-access holes, copes, beam-web penetrations, and other details may need to be made in those members, and thermal cutting generally is used. Bevels are cut and metal removed by thermal cutting methods. Like welding, these thermal cutting processes introduce heat into the member, and the subsequent cooling of the hot metal creates a heat-affected zone (HAZ) in the material being cut. Such HAZs are typically smaller than those associated with welding and are not typically of concern.

The quality of a cut edge is important. For edges that will not be welded upon, nicks and gouges affect the appearance, and may affect the performance of a member, particularly when cyclically loaded. For thermally cut surfaces on which welds will be placed, the cut quality may affect the weld quality and integrity. Smooth, planar surfaces are the goal. Mechanically guided cuts are typically smooth enough so

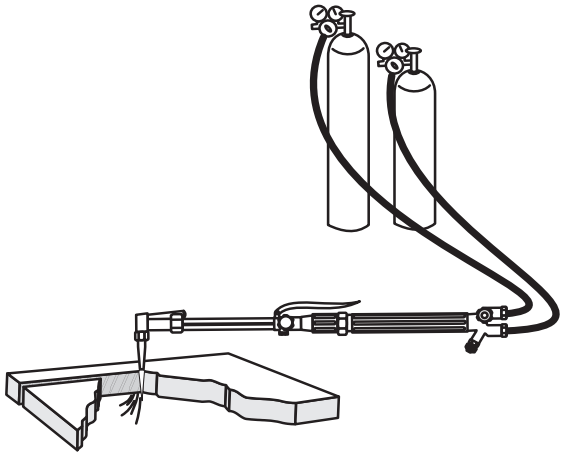

Figure 2–33. Oxyfuel cutting.

that no repairs are required. Minor flaws can be repaired by grinding. Larger defects can be repaired by welding. AWS D1.1 provides limits on the extent of allowable repairs.

Three thermal cutting processes commonly used for structural steel fabrication will be examined, as follows: oxyfuel gas cutting and gouging, plasma arc cutting and gouging, and air carbon arc gouging and cutting.

2.9.1 Oxyfuel Gas Cutting and Gouging

Oxyfuel gas cutting (OFC) is a thermal cutting process that relies on combustion of a fuel gas to heat a material to the kindling temperature, followed by the use of a stream of oxygen that creates the chemical reaction of oxidation of the metal being severed (Figure 2–33). This reaction releases thermal energy that heats the surrounding material, and maintains the high temperature. The pressurized stream of oxygen displaces oxidized material from the cut region, known as the kerf.

A variety of fuel gases may be used for oxyfuel gas cutting, including acetylene, natural gas, propane, and several proprietary gases that have been developed.

Oxyfuel gas cutting can cut any material that can sustain the oxidation reaction, including carbon steel. Materials like stainless steel and aluminum cannot be cut with this process (unless modified) because the oxides form a tightly adherent coating that inhibits continuation of the oxidation process.

An important feature of oxyfuel gas cutting is that its inherent oxidation reaction releases thermal energy through the thickness of the material being severed. Once a cut has been initiated, it is the thermal energy created by the oxidation process that allows the cut to continue. If, for example, a 4-in.-thick piece of steel is being cut, the process does not require that the thermal energy from the oxyfuel torch be conducted through the 4-in. thickness. Rather, heating from oxidation occurs through the thickness of the material, immediately adjacent to the cut. This permits OFC to cut steel in excess of one foot thick.

OFC is colloquially known as "burning," which provides helpful insight into the operation of the process, since oxidization is such a key aspect of it. Another colloquial term associated with oxyfuel gas cutting, in contrast, is very unhelpful, and may be dangerous; welders often refer to the pure oxygen used for cutting as "air." The air in the atmosphere is only about 20 percent oxygen. Pure oxygen supports combustion under conditions where flames may normally be extinguished in an air atmosphere. Compressed pure oxygen, for example, should never be used to blow dirt off of dirty clothing.

The basic apparatus for oxyfuel gas cutting can be used for preheating or even oxyfuel welding simply by making a minor change to the torch assembly. With a change in the nozzle, the same oxyfuel gas cutting apparatus can be used to gouge. U-groove weld details can also be prepared with oxyfuel gouging.

For primary cutting in a fabrication shop, oxyfuel gas cutting is typically mechanized, often with multiple torches on large cutting tables. Bevels on members to be joined with groove welds are also typically cut with mechanized systems, improving the quality of the cut while lowering costs.

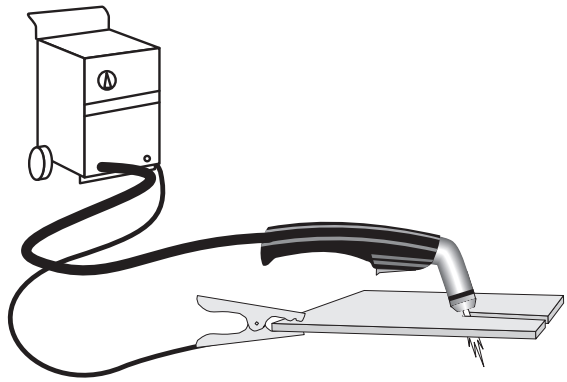

Figure 2–34. Plasma arc cutting.

2.9.2 Plasma Arc Cutting and Gouging

Plasma arc cutting (PAC) is a thermal cutting process that uses a constricted arc to heat and remove molten metal with a high velocity jet of ionized gas emitted from a constricted nozzle or orifice (Figure 2–34). When gases are exposed to an arc under constricted conditions, an electrically conductive, extremely hot plasma gas is created. The plasma heats the work, and the high-velocity gas mechanically expels the molten metal out of the kerf.

PAC requires the use of a special plasma arc cutting power supply, which may superficially look like an arc welding power supply, but the nature of the output is significantly different. A special PAC cutting torch is also required.

A chief advantage of plasma arc cutting is that it can be used to cut materials that cannot be cut with oxyfuel gas cutting. PAC can be used to cut any electrically conductive material, including carbon and low-alloy steel, stainless steel, aluminum, and copper. PAC cuts thinner sections of steel (less than ¾ in. thick) faster than OFC, offering productivity advantages.

Plasma arc cutting does not involve the oxidation reactions associated with oxyfuel gas cutting, and this constitutes a major limitation of PAC when it is applied to thicker sections of steel (greater than 2 in.). All the thermal energy for cutting with PAC must be delivered by the torch, and all the thermal energy must be conducted through the thickness

of the member being cut before it can be severed. Also, in order to deliver the energy necessary to cut heavier sections, the output capacities of the PAC power source must be substantially increased, which in turn results in greater equipment costs. Thus, when given a choice, oxyfuel gas cutting is typically used to cut thicker steel, and PAC used on thinner steel. Stainless steel and aluminum, of necessity, are cut with PAC, even when in thicker sections.

A slight modification to the plasma cutting torch can enable the process to be used for gouging.

2.9.3 Air-Carbon Arc Gouging and Cutting

Air carbon arc gouging involves the heating of base metal by an arc conducted between a carbon electrode, and the work piece, and a stream of compressed air that mechanically removes the heated metal (Figure 2–35). The process can be powered by the same type of equipment that is used for welding, requiring only the addition of a dedicated torch and a source of compressed air. Metal removal is rapid and when properly done, a smooth half-cylindrical cavity is created.

The electric arc between the carbon electrode and the base metal heat and melt a localized pool of metal, and the mechanical action of the high-pressure, high-velocity stream of compressed air blows the molten metal away. Some oxidation also occurs as the compressed air contains about 20 percent oxygen.

Air carbon arc gouging can be used to prepare U-groove weld details, backgouge double-sided joints, and remove defective weld metal during repair operations.

With a slight modification of technique, the process can be used to sever materials, although the cut quality is inferior to oxyfuel gas cutting and plasma arc cutting.

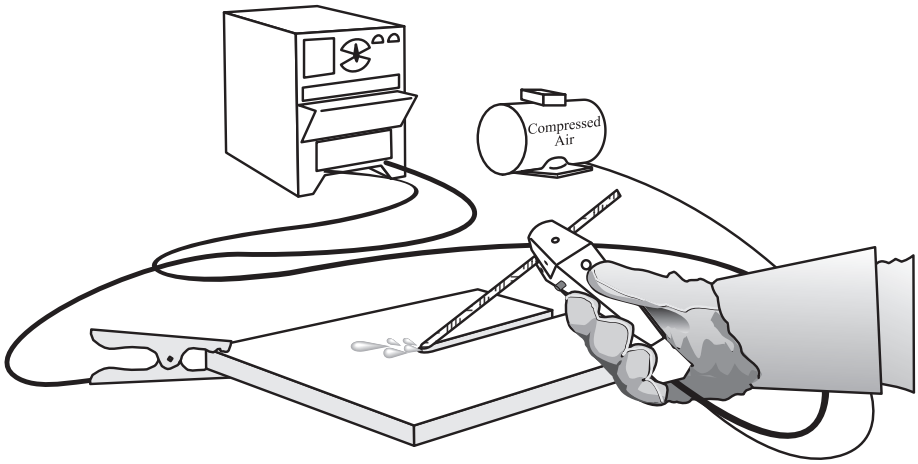

Figure 2–35. Arc air gouging.

3. Welded Connections

3.1 JOINTS

When pieces of steel are brought together to form a joint, they assume one of the five configurations presented in Figure 3–1. Of the five, butt, T-, corner, and lap joints are common in construction. Butt joints include column splices and flange splices on plate girders. T-joints have varied applications, including shear tabs to columns, gussets to beams, beams to columns, and columns to base plates. Corner joints are represented by the outside seams on built-up column sections. Examples of lap joints include coverplates on rolled beams, angles to gusset plates, and clip angles to beam webs. Edge joints are more common for sheet metal applications. Joint types merely describe the relative positioning of materials; the joint type does not imply a specific type of weld.

3.2 WELD TYPES—GENERAL

Welds may be placed into three major categories: groove welds, fillet welds, and plug/slot welds, as shown in Figure 3–2. For groove welds, there are two subcategories: complete joint penetration (CJP) groove welds and partial joint penetration (PJP) groove welds (Figure 3–3). Groove and fillet welds are of primary interest for major structural connections. The most common use of plug and slot welds in structural applications is for joining the center of large web doubler plates to deep wide-flange members (fillet welds are typically applied around the perimeter).

Terminology associated with groove and fillet welds is described in Figure 3–4. Of primary interest to the designer is the dimension noted as the "throat." The throat is theoretically the weakest plane in the weld and therefore controls the design of many welds.

3.3 COMPLETE JOINT PENETRATION (CJP) GROOVE WELDS

By definition, complete joint penetration (CJP) groove welds have a throat dimension equal to the thickness of the plates that they join (Figure 3–4). In the past, these welds were known as complete penetration (CP) welds, and before that, full penetration (FP) welds. For statically loaded structures, CJP groove welds develop the full strength of the attached materials.

CJP groove welds may be applied to butt, T-, and corner joints. They are often required in butt joints loaded in tension. When butt joints are loaded in compression, and for T and corner joints loaded in shear, design requirements rarely justify the use of CJP groove welds.

In general, the prequalified CJP groove weld details listed in AWS D1.1 require steel backing if made from one side and back gouging if made from both sides (see Section 3.3.1). This ensures complete fusion throughout the thickness of the material being joined. In general, for CJP groove weld details welded from one side without steel backing, or for two-

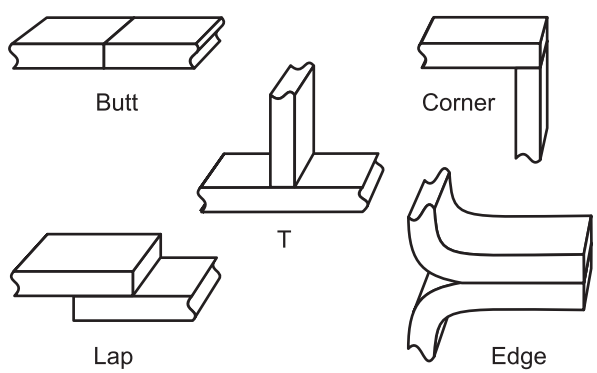

Figure 3–1. Joint types.

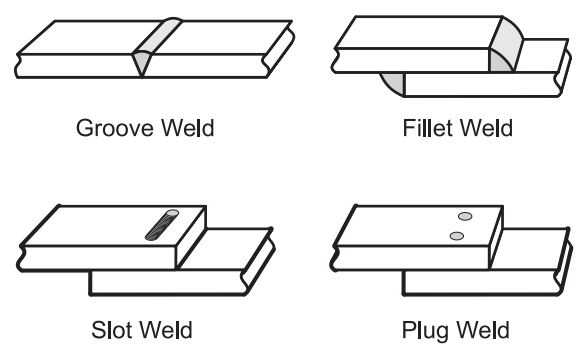

Figure 3–2. Major weld types.

sided details without backgouging, procedure qualification testing is required to prove that the full throat is developed. A special exception to this is applied to tubular connections, for which CJP groove welds may be made from one side without backing.

CJP groove welds have two advantages over other weld types, and these advantages have also resulted in widespread abuse with respect to the tendency to specify CJPs in situations where there are better options. As has been mentioned, these welds develop the full strength of the connected material. Thus, one advantage of these welds is that no design calculations are required when CJP groove welds are used in statically loaded structures. The simple specification of "CJP" in the tail of the welding symbol is sufficient to ensure that when fabricated according to the applicable standards, the weld will develop the strength of the connected material.

The simplicity of specifying CJP groove welds has led to abuse in specifying CJP groove welds for situations where they are not required. Perhaps the most commonly abused case is that of longitudinal welds on built-up beam and column sections. These welds are typically loaded in shear, which rarely requires the strength of CJP groove welds. Fillet welds or PJP groove welds are typically better, lower-cost options for this case. A notable exception to this general principle involves the design of longitudinal welds on built-up crane girders, where the rail bears directly on the top flange above the web. CJP groove welds may be required for such applications, not because of shear, but due to the high, direct compressive loads.

CJP groove welds may be inspected with more nondestructive testing (NDT) methodologies than other weld types. Depending on the joint involved (butt, corner, T), the whole volume of weld metal in a CJP groove weld can be inspected with radiographic inspection (RT) or ultrasonic inspection (UT). These and other NDT processes are covered in detail in Chapter 9 of this Guide. For certain critical connections, it may be prudent to use a CJP groove weld simply because of the ability to perform a volumetric inspection. However, where CJP groove welds are not required, alternative weld types should be considered along with appropriate in-process visual inspection, perhaps enhanced with the use of dye penetrant (PT) or magnetic particle (MT) inspection.

CJP groove welds loaded in tension, require the use of matching strength filler metal (see Section 3.11). When loaded in compression or shear, undermatching filler metal is a possibility, although in most situations, matching material is used.

3.3.1 CJP Groove Weld Backing

Backing is an auxiliary piece of material that is used to support and retain molten weld metal (Figure 3–5). Although typically made of steel, backing may be made of other materials such as copper or ceramic. Backing is considered fusible or non-fusible, depending on whether or not the weld is intended to bond to the backing. Backing is typically associated with CJP groove welds made from one side.

While the proper terminology according to AWS A3.0 is simply "backing," a whole range of colloquial terms are used, including "weld backing," "backing bars," and "backing strips."

Weld backing and weld tabs are different; weld tabs are discussed in Section 3.9.1 of this Guide.

Steel Backing

Steel backing is fusible backing; that is, the weld metal is intended to fuse with the backing material. While it might be

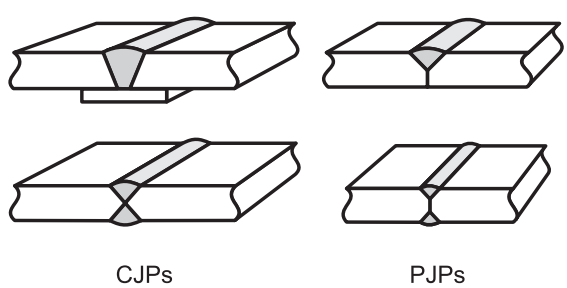

Figure 3–3. Types of groove welds.

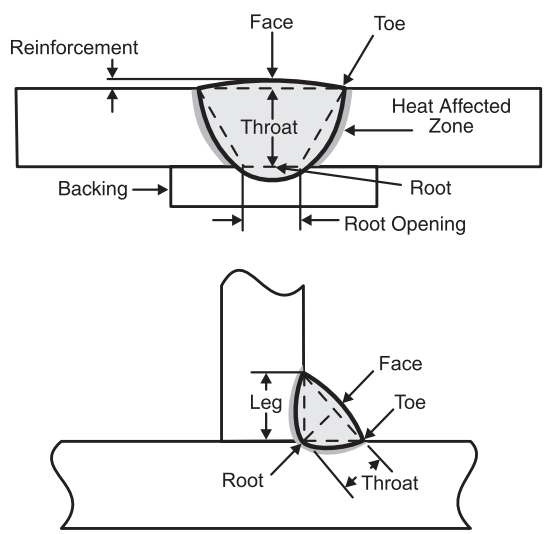

Figure 3–4. Weld terminology.

casually viewed as simply part of the contractor's means and methods, when steel backing is left in place, it becomes part of the final structure and it is important to consider the potential influence of the backing. Left-in-place steel backing may introduce unintended load paths or may create unanticipated and unacceptable stress raisers. In other situations, backing does not create such stress risers, and it is therefore acceptable to leave the backing in place.

The AISC Specification and AWS D1.1 have requirements that address common backing conditions. For example, AWS D1.1 Provision 5.10 requires steel backing to be continuous for the length of the joint. Consider steel backing that is parallel to the stress field in a longitudinal member, such as a box section. If segments of backing are used in a single joint, the intersections between the backing segments create a stress riser perpendicular to the stress field. This is particularly harmful for structures subject to cyclic loading and has also led to problems with statically loaded applications. If segments of backing must be used in one joint, AWS D1.1 permits the backing segments to be joined to each other with CJP groove welds.

AWS D1.1 also mandates thorough fusion between the weld and the backing and suggests minimum recommended backing thicknesses to prevent melt-through. For statically loaded structures, the backing is permitted to be left in place, and attaching welds need not be full length, unless otherwise specified by the engineer. In AISC Specification Table J2.5, it is stipulated that when steel backing is left in place in T- and corner joints, CJP groove welds subject to tension normal to their longitudinal axis are to be made with filler metal that can achieve a minimum Charpy V-notch toughness of 20 ft-lb when tested at +40 °F or lower. If this is not done, the weld is to be designed as a PJP groove weld, in accordance with Section J2.6.

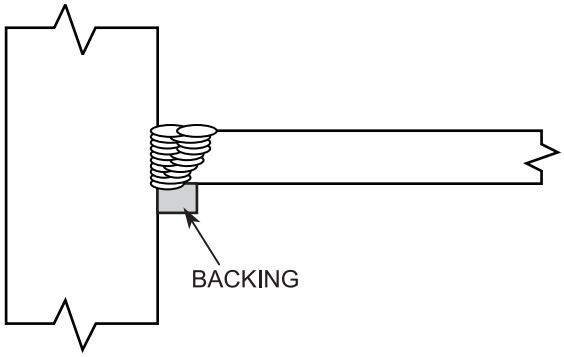

Figure 3–5. Weld backing.

For cyclically loaded structures, steel backing in welds that are transverse to the direction of computed stress is required to be removed, while backing on welds that are parallel to the direction of stress is not required to be removed (AWS D1.1, Provision 5.10). Also see Chapter 11 of this Guide. For structures designed to resist high-seismic loading, the AISC Seismic Provisions (AISC 341) and the AISC Prequalified Connection Standard (AISC 358) require backing to be removed from some joints. See Chapter 10 of this Guide.

Acceptable steels for weld backing are defined in AWS D1.1. Various kinds of unacceptable materials have been inappropriately used over the years, including reinforcing steel. Only code-listed materials should be used.

Ceramic Backing

Ceramic backing consists of a series of ceramic tiles affixed to an adhesive tape that can be attached to the root side of a joint. The high melting point of the ceramic permits this material to contain the molten pool of weld metal, yet not melt. In situations where steel backing is required to be removed, the Contractor may choose to use ceramic backing as it is nonfusible and can be easily removed after the weld is completed.

The challenge in using ceramic backing comes from the non-electrically conductive nature of ceramics. For arc welding, a complete electrical circuit is required. While the welding current can flow from the electrode to the steel pieces being joined, current cannot be conducted through the ceramic. The welder must therefore establish a "bridge" of weld metal between the two pieces being joined, over the ceramic backing. Once this has been done, welding can proceed so long as the arc is always maintained against this bridge.

While AWS D1.1 specifically permits the use of ceramic backing, none of the prequalified joint details use it, so welding procedure specifications (WPSs) that call for ceramic backing must be qualified by test.

Copper Backing

Backing can be made of copper, which, when properly used, does not fuse to the steel weld. When the weld is complete, the copper backing is removed and can be reused. Typically, copper backing is held in place with mechanical clamps and brackets.

Copper has a lower melting point than steel, but a much higher rate of thermal conductivity. When the molten steel weld puddle comes into contact with the copper, the thermal energy is conducted away, raising the temperature of the copper, but not melting it. This is a delicate balance, and it is easy to inadvertently melt the copper, causing several problems. If melted, the copper backing will no longer be easy to remove, and the copper may be so damaged as to preclude its

reuse. When the copper backing melts, it introduces copper into the weld metal, and this addition may cause cracking in the weld metal. Therefore, care must be taken to avoid melting the copper.

While AWS D1.1 specifically permits the use of copper backing, none of the prequalified joint details use it, so WPSs that call for copper backing must be qualified by test.

3.3.2 Single-Sided vs. Double-Sided Welds

The selection of single-sided versus double-sided welds is typically based upon issues of access, distortion control, and economy. If access is impractical or impossible, single-sided welds will be required. The effect of this topic on distortion is discussed in Chapter 6, whereas the economic issues are covered in Section 14.3.3 of this Guide.

3.3.3 Groove Weld Preparations

A variety of groove weld preparations are possible for CJP groove welds (Figure 3–6). Preparations are necessary because, except for the thinnest of materials, the penetration of the welding processes is typically not adequate to obtain the depth of fusion required for the needed weld strength. Thinner sections, up to a maximum of ⅜ in., may be joined with square edge preparations using prequalified WPSs.

For most structural steel applications, therefore, some type of joint preparation is required. The easiest preparations to make and the most commonly applied involve planar surfaces, e.g., the V- and bevel-groove weld types. The curved surfaces associated with the U- and J-groove preparations are more costly to prepare because they typically involve machining or air-arc gouging. The curved surface details usually require less weld metal in order to obtain a weld of the same strength as the planar surface alternatives.

When properly detailed and welded, any of the CJP groove weld details will yield a connection equal in strength to the connected material. Similarly, a variety of PJP groove weld details can be used to achieve the specified effective throat dimensions. As a result, the typical practice in the structural steel industry is for the engineer to leave the selection of the groove weld type and details up to the contractor. Based upon factors such as knowledge and experience, the plan of fabrication and erection, as well as available equipment, the contractor selects the groove weld detail that yields the required quality at the lowest cost.

3.3.4 Spacer Bars

Some of the AWS D1.1 prequalified joint details incorporate a spacer bar, or spacer strip, which is an auxiliary piece of metal inserted in the joint that acts as backing while one side of a double-sided weld is made (Figure 3–7). Before the second side is welded, all the lack-of-fusion planes surrounding the spacer bar are removed by backgouging.

Conceptually, the spacer bar functions as backing for a double-sided weld. It allows for a larger root opening, which in turn permits smaller included angles, all while retaining the advantages of a double-sided weld. Groove weld details utilizing the spacer bar have proven to be the lowest cost detail when material thicknesses exceed 4 in., and where access to both sides of the joint is possible. A detailed comparison is contained in Section 14.3.5 of this Guide.

Groove weld preparations that utilize spacer bars must be made properly. The spacer bar should not be interrupted along the length of the joint and must be made of approved material. When the joint is backgouged, all traces of incomplete fusion between the weld and the spacer bar must be removed before the second side is welded.

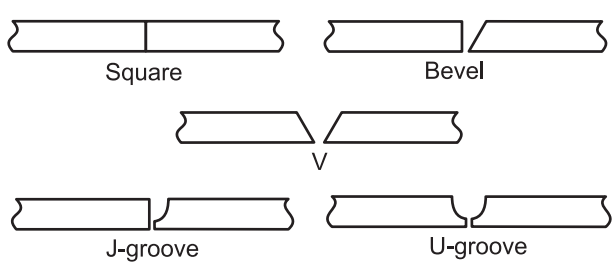

Figure 3–6. Groove weld preparations.

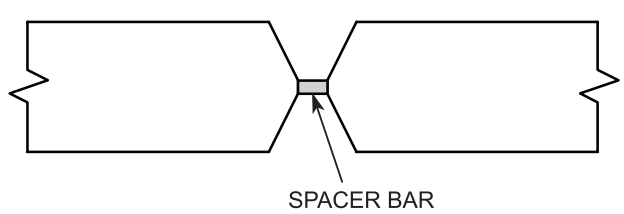

Figure 3–7. Spacer bar detail.

3.4 PARTIAL JOINT PENETRATION (PJP) GROOVE WELDS

A PJP groove weld is one that, by definition, has a throat dimension less than the thickness of the materials it joins (see Figure 3–3). PJP groove welds can be applied to butt, corner, and T-joints. They are commonly used for column splices where the butt joint is usually loaded in compression, or with only limited tension. PJP groove welds are also commonly used in corner joints of built-up box columns. Both fillet welds and PJP groove welds can be used in T-joints, and inside corner joints. The relative economic advantages of both are discussed in Section 14.2 of this Guide.

3.4.1 Effective Throats for PJP Groove Welds

In a partial joint penetration groove weld, the "effective throat" dimension delineates between the depth of groove preparation and the probable depth of fusion that will be achieved (Figure 3–8). When submerged arc welding (which has inherently deep penetration) is used, and the weld groove included angle is 60°, Table J2.1 of the AISC Specification allows the designer to rely on the full depth of joint preparation to be used for delivering the required throat dimension. AWS D1.1 Figure 3.3 shows the effective throat and required depth of groove preparation for various prequalified PJP groove weld details, as a function of the welding process, position of welding, and included angle.

When processes with reduced penetration capability are used, such as shielded metal arc welding, or when the groove angle is restricted to 45°, it is unlikely that fusion to the root of the joint will be obtained. Because of this, Table J2.1 assumes that ⅛ in. of the PJP groove weld joint will not be fused. Therefore, for such conditions, the effective throat is assumed to be ⅛ in. less than the depth of preparation.

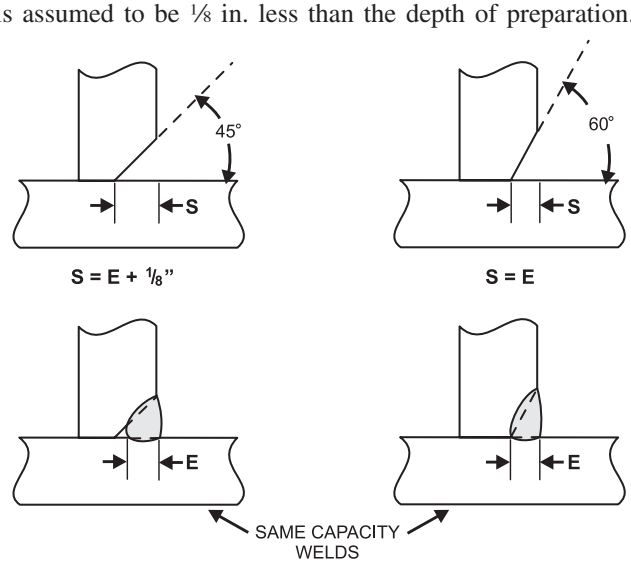

Figure 3–8. PJP groove welds: "E" vs. "S".

This means that for a given included angle, the depth of joint preparation must be increased to offset the loss of penetration.

The effective throat dimension for a PJP groove weld is abbreviated utilizing a capital "E." The required depth of joint preparation is designated by a capital "S." Since the engineer does not normally know which welding process a fabricator will select, nor the position in which welding will be performed, the design drawing need only show the effective throat ("E") dimension. The fabricator chooses the welding process, determines the position of welding, specifies the included angle, and selects the appropriate S dimension, which will be shown on the shop drawings. In most cases, both the S and the E dimension will be stipulated on the welding symbols of shop drawings, with the effective throat dimension shown within parentheses.

3.4.2 Minimum PJP Groove Weld Sizes

Table J2.3 in the AISC Specification prescribes a minimum effective throat size for PJP groove welds, as a function of the thickness of the thinner of the parts joined. This table is not based on assumed minimum design loads, but rather deals with welding-related concerns. The interaction of fillet weld size and heat input is discussed in Section 3.5.1 of this Guide, and the same principles apply to PJP groove welds.

3.4.3 Restrictions on the Use of PJP Groove Welds

Because PJP groove welds do not fully fuse the cross-section of the joint, there will always be an unfused plane under the root of the PJP, or in the case of double-sided PJPs, between the two. This has performance and inspection implications. Regarding performance, the unfused plane may create a stress concentration, depending on the direction of loading. When loaded in shear, this stress concentration is of no concern. When subject to cyclic tensile loading, this region must be considered in the design of the connection (see Section 11.3 of this Guide).

Single-sided PJP groove welded joints should be checked to ensure that rotation about the root of the joint cannot occur, regardless of the loading conditions. Like single-sided fillet welds, single-sided PJP groove welds can readily tear from the root when rotated about the root. Rotation can be prevented by diaphragms or stiffeners, or in some cases, simply by the overall configuration of the member.

The unfused plane in the root of PJP groove welds makes radiographic (RT) and ultrasonic (UT) inspection results difficult to interpret. Neither RT nor UT is recommended for such welds, not only because of the interpretation difficulties, but also because nondestructive testing is typically not required for this type of application.

3.4.4 Required Filler Metal Strength for PJP Groove Welds

For all PJP groove welds, regardless of direction or type of loading, matching or undermatching filler metal may be used (see Section 3.7 of this Guide).

3.4.5 Flare-V and Flare-Bevel-Groove Welds

Flare-V and flare-bevel-groove welds are special types of PJP groove welds. Such welds are placed in the groove created when one curved surface intersects either a flat surface (flare bevel) or another curved surface (flare V), as shown in Figure 3–9. Corners of cold-formed box (rectangular) tubing create such curved surfaces, as well as do the corners of material bent in press brakes.

The effective throat "E" of these welds is a function of the radius "R" and the welding process. The radius on HSS can be approximated as 2*t*, where *t* is the thickness of the tube wall—see Figure 3–10. However, this is only an approximation, and mill practices vary in this regard. AISC Specification Table J2.2 provides the relationships between the radius *R* and the effective throat, unless other effective throat dimensions have been demonstrated by tests. Such tests are outlined in AWS D1.1 and consist of making a representative weld, cutting it perpendicular to the longitudinal axis, polishing and etching the cross-section so that the effective throat can be determined.

The throat dimensions shown in Table J2.2 assume that the groove is filled flush. The throat of underfilled joints is reduced by the amount of underfill (Figure 3–11).

3.4.6 Single-Sided vs. Double-Sided

Like CJP groove welds, PJP groove welds may be single sided or double sided. The double-sided PJP groove weld always requires less weld metal, and the only cost-related variables that need to be balanced are the joint preparation time and welding time, assuming that access to both sides of the joint is possible. Double-sided PJP groove welds are typically advantageous for controlling distortion.

3.4.7 PJP Groove Weld Details

The engineer need only specify the required effective throat ("E") dimension, leaving the contractor the option of selecting the required depth of preparation ("S") appropriate for the welding conditions, as well as selecting the type of PJP groove weld detail (V, bevel, J, or U). Unless the weld size is large, most PJP groove welds are most economically made with the planar preparations (e.g., Vs and bevels).

3.5 FILLET WELDS

Fillet welds have a triangular cross-section and are applied to the surface or edges of the materials that they join. Fillet welds by themselves do not fully fuse the cross-sectional areas of parts that they join, although it is usually possible to develop full-strength connections with fillet welds alone. Fillet welds can be applied to T- and lap joints, and to the inside corner of corner joints. Fillet welds may be used to add strength to PJP groove welds, and may be used to provide for a more gradual contour to CJP groove welds in T- and corner joints. When used in conjunction with CJP groove welds, the strength of the fillet weld is not added to that of the CJP groove weld.

Fillet welds are used extensively in structural steel fabrication and are often used to join shear tabs to columns, gussets to beams and columns, stiffeners to webs, and light columns to base plates, as well as many other examples.

The size of a fillet weld is specified in terms of the leg size, even though the strength of the weld is theoretically controlled by the throat size. For equal-legged, flat-faced, or convex-faced fillet welds applied to surfaces that are oriented 90° apart, the throat dimension is found by multiplying the leg size by 0.707 (e.g., sin 45°).

Because fillet welds do not fuse the cross-section of the joint, there will always be an unfused plane under the root of the fillet, or in the case of double-sided fillets, between the two (unless the fillet is applied on top of a groove weld). Single-sided fillet welded joints should be checked to ensure that the rotation about the root of the joint cannot occur, re-

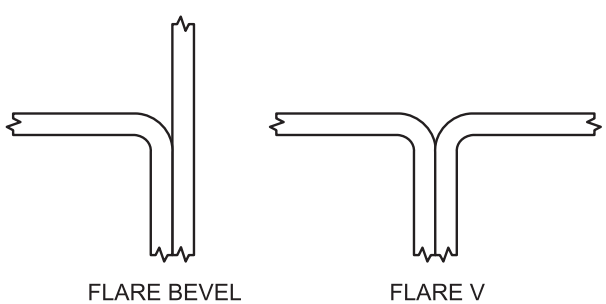

Figure 3–9. Flare-bevel-groove welds and flare-V-groove welds.

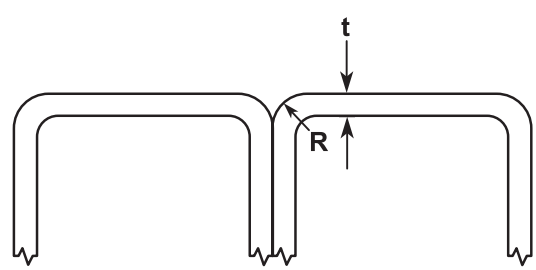

Figure 3–10. HSS *radius and wall thickness, t.*

gardless of the loading conditions. Rotation can be prevented by diaphragms or stiffeners, or in some cases, simply by the overall configuration of the member.

Inspection of fillet welds with radiographic (RT) and ultrasonic (UT) inspection is not practical, for multiple reasons. The triangular cross-section alone is problematic for these inspection techniques, and the naturally occurring lack of fusion plane will always confuse interpretation of the results.

For all fillet welds, regardless of direction or type of loading, matching or undermatching weld metal may be used (see Section 3.11 of this Guide).

3.5.1 Minimum Size of Fillet Welds

AISC Specification Table J2.4 specifies minimum weld sizes that are a function of plate thickness. These are not design-related requirements but are used to address welding-related concerns that involve fusion and cracking.

In order to make a good arc weld, there is a minimum amount of thermal energy that must be introduced into the joint. Failure to do so may result in the deposition of weld metal, albeit without fusion to the base metal. Alternatively, when insufficient thermal energy is delivered to the joint, the cooling rate experienced by the weld and the heat-affected zone may be such that cracking occurs.

To ensure that a reasonable level of thermal energy is introduced into the joint, AISC Specification Table J2.4 requires that a certain minimum weld size be applied, regardless of design loads. This is possible because there is a direct relationship between the thermal energy introduced into the joint and the weld size applied to the joint. This assumes, however, that the weld size is applied in a single pass.

Heat input is typically used to directly estimate the amount of thermal energy that is introduced into the joint, using the following equation:

$$H = \frac{60EI}{1000S_W}$$

where

E = arc volts
I = amperage
S_W = travel speed (in./min)
H = heat input (kilojoules/in., or KJ/in.)

In order to create a larger weld in one pass, two approaches may be used: higher amperages (I), or slower travel speeds (S_W) must be employed. Notice that either procedure modification results in a higher heat input.

Table J2.4 specifies minimum acceptable weld sizes with the primary purpose of dictating minimum heat input levels. For example, almost independent of the welding process used, a ¼ in. fillet weld will require a heat input of approximately 20-30 KJ/in. By prescribing a minimum fillet weld size, these specifications, in essence, stipulate a minimum heat input.

The minimum fillet weld size need never exceed the thickness of the thinner part being joined. In some extreme circumstances, the connection might involve an extremely thick plate being joined to a very thin plate. The AISC Specification dictates that the weld need not exceed the size of the thinner part. However, under these circumstances, additional preheat based on the thicker material may be justified.

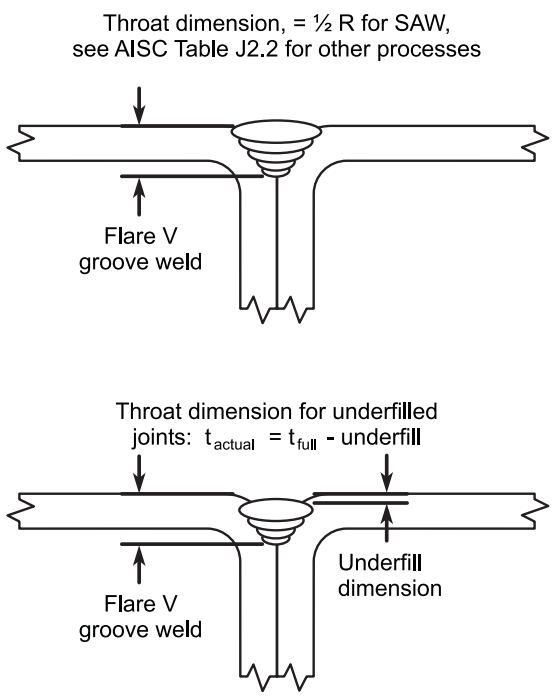

Figure 3–11. Determining effective throat dimensions.

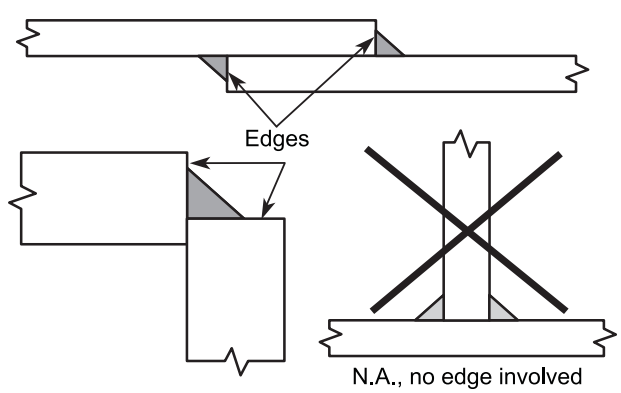

Figure 3–12. Welds on edges.

3.5.2 Maximum Size of Fillet Welds

Both the AISC Specification and AWS D1.1 have provisions that specify maximum fillet weld sizes. These provisions are frequently misunderstood and misapplied. AISC Specification Section J2.2b requires a maximum fillet weld size along the edges of material ¼ in. or more in thickness. Note that this applies only to the situation where welds are applied "along the edges." Such conditions include lap joints, and some corner joint configurations, but do not include T-joints (Figure 3–12).

These provisions came about because it is possible for welders (particularly when using SMAW electrodes) to melt away the top edge of the member when welding on an edge. This creates a weld with a normal weld toe dimension, but the corresponding weld throat may be much smaller than the designer intended (Figure 3–13).

Melting away the top edge is not detrimental to the welded joint, provided that the required throat dimension is obtained. For thinner materials (identified as less than ¼ in. thick), this situation is less likely to occur, and thus these provisions only apply to the edges of thicker members.

The common misuse of these provisions comes about when they are applied to situations involving the placement of welds on a surface versus on an edge. Consider a tube column welded to a base plate. A fillet weld may be specified, and may be required to develop the full capacity of the tube wall. Assuming access to the inside of the tube is limited (as is typically the case), the single-sided weld will often need to have a leg size that exceeds the tube wall thickness. The maximum fillet weld size provisions do not apply in this situation since the weld is not on an edge.

If it is required for a weld to have more capacity than is provided with a fillet weld with a leg size that is 1⁄16 in. less than the thickness of the edge, it may be possible to specify an unequal legged fillet, allowing the other leg to be larger.

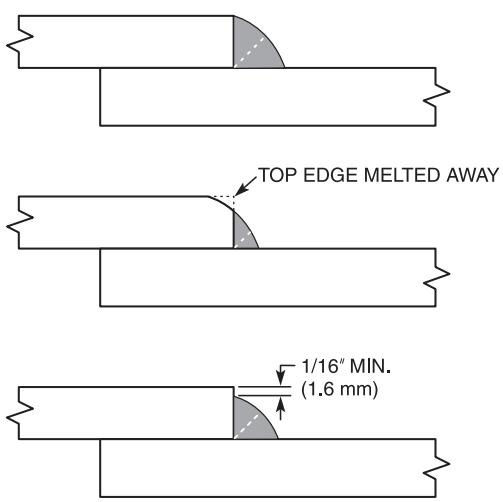

Figure 3–13. Maximum fillet weld size along the edge.

This approach, however, is inefficient; doubling one leg of a fillet weld doubles the amount of weld metal needed, but only increases the weld's strength by 25 percent.

3.5.3 Minimum Fillet Weld Lengths

AISC Specification Section J2.2b requires that fillet weld lengths be at least four times the leg size. For welds that do not meet this criterion, the effective weld size is to be taken as ¼ of its length. The four times length provision, combined with the Table J2.4 minimum fillet weld size, results in a minimum weld length requirements as a function of the thickness of the material being joined, although such provisions are not explicitly stated.

3.5.4 Maximum Fillet Weld Lengths

AISC Specification Section J2.2b limits the maximum effective length of fillet welds under a specific set of conditions. Consider a lap joint with longitudinal fillet welds. When a tensile load is applied, the fillet welds may be considered end-loaded. The maximum length provision permits weld lengths of up to 100 times the leg size without adjustment. For welds that exceed this limit, the effective length must be reduced to account for shear lag effects.

The following is used to calculate the reduction factor:

$$\beta = 1.2 - 0.002\,(L/w) < 1.0$$

$$L_{eff} = \beta \times L$$

where

β = length reduction factor
L = actual length of end-loaded weld, in.
w = weld leg size, in.
L_{eff} = effective length, in.

When the length of the weld exceeds 300 times the leg size, the value of β is 0.60.

The 100 times weld length is rarely exceeded, and a fillet weld under these conditions (e.g., end-loaded) that is 300 times the leg size would be extremely rare (Miller, 1998a).

3.5.5 Intermittent Fillet Welds

Intermittent welds may be used to transmit loads, and are natural options for lightly loaded connections. The minimum weld length discussed in Section 3.5.3 of this Guide also applies to intermittent fillet welds, but, in addition, the minimum length is not permitted to be shorter than 1½ in. For connections subject to cyclical loading, intermittent fillet welds have a low allowable stress range. See Chapter 11 of this Guide.

Multiple-pass intermittent fillet welds are not prohibited, but they are never an economical solution. See Section 14.3.2 of this Guide.

3.5.6 Penetration in Fillet Welds

A flat-faced or convex-faced, equal-legged fillet weld in a 90° T-joint has a theoretical throat dimension of 0.707w, where w is the leg size (Figure 3–14). This assumes that fusion is achieved to the root of the joint, but not necessarily beyond that point. When the welding process and procedure achieve a depth of penetration beyond the root, the effective throat dimension is increased for fillet welds with equal leg sizes. The effective throat dimension, t_{eff}, is then equal to the theoretical throat, t_{th}, plus some additional value due to penetration (Figure 3–15). Therefore, if penetration beyond the root is achieved, the leg size can be reduced and the same weld strength can be achieved. This reduces the required quantity of filler metal and, if the penetration fillet weld can be made at the same or higher travel speeds, welding costs can be reduced.

AISC Specification Section J2.2a states that "an increase in effective throat is permitted if consistent penetration beyond the root of the diagrammatic weld is demonstrated by tests using the production processes and procedure variables." The increase is permitted, regardless of process, providing consistent penetration can be demonstrated.

Two cautions are offered with respect to this practice. First, the ability to obtain this penetration must be repeatable. With fillet welding, root penetration depends on many factors, including the welding amperage, travel speed, electrode diameter, electrode orientation with respect to the joint, the thickness of the material being welded, and the fillet weld size. For operations where such variables are controlled, penetration can be consistently achieved. However, when these variables are not properly controlled, the penetration will be inconsistent as well.

Secondly, the role of the base metal composition and the potential for centerline cracking due to undesirable base metal compositions should be considered. Welding procedures that result in deep penetration introduce more base metal into the weld metal. Furthermore, improper width-to-depth ratios can cause centerline cracking, and deep penetration encourages these undesirable profiles. These phenomena are discussed in detail in Section 5.3.1 of this Guide.

3.5.7 Longitudinal vs. Transverse Fillet Welds

The traditional approach used to design a fillet weld assumes that the load is resisted by the weld's throat, regardless of the direction of loading. Experience and experimentation, however, have shown that fillet welds loaded perpendicular to their longitudinal axis have an ultimate strength that is approximately 50 percent greater than the same weld loaded parallel to the longitudinal axis (Figure 3–16). The traditional approach, in which direction of loading is not considered, is therefore conservative. However, when the direction of loading is considered, smaller fillet welds may be possible, resulting in greater design economy.

The nominal stress permitted on a linear weld group loaded in-plane through the center of gravity is the following:

$$F_w = 0.60F_{EXX}(1.0 + 0.50 \sin^{1.5}\theta)$$

where

F_w = nominal unit stress, ksi
F_{EXX} = electrode classification number, i.e., minimum specified tensile strength, ksi
θ = angle of loading measured from the weld longitudinal axis, degrees

For parallel loading, $\theta = 0°$, and the parenthetical term in the above equation becomes 1, yielding the same nominal

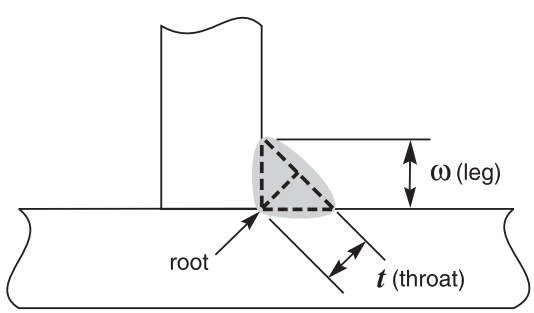

Figure 3–14. Fillet weld dimensions.

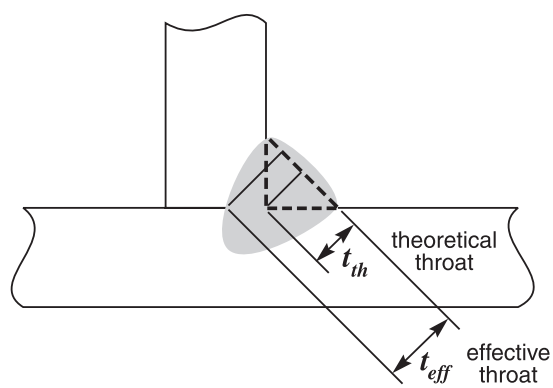

Figure 3–15. Effective throat dimension with penetration.

unit stress that has been traditionally permitted. For perpendicular loading, $\theta = 90°$, and the parenthetical term becomes 1.5, permitting the increased nominal unit strength.

Along with the increase in strength of welds loaded perpendicular to their length, there is a decrease in the deformation capacity before failure (Figure 3–17). If significant post-yield deformation capacity is desired, the longitudinal weld orientation (i.e., parallel loading) would be preferred. Most engineered structures are expected to remain elastic under design loads, so considering only the strength is generally adequate. However, for structures that may be subject to overload conditions where large amounts of plastic deformation that precede failure are desired, the designer may choose to orient the welds parallel to the major applied load (Miller, 1998b).

3.5.8 Combined Longitudinal vs. Transverse Welds

When longitudinal and transverse welds are combined into a single weld group, the difference in deformation capacity between the two does not permit the full strength of both welds to be achieved simultaneously. Ultimately, the two welds must be strained in a compatible manner, and since the load/deformation curves are nonlinear and unique, it is difficult to determine how much capacity will be contributed by each element of the combination.

The AISC Specification addresses this issue by permitting the use of the greater of the following:

$$R_n = R_{wl} + R_{wt}$$

or

$$R_n = 0.85R_{wl} + 1.5R_{wt}$$

where

R_{wl} = the total nominal strength of the longitudinally loaded fillet welds

R_{wt} = the total nominal strength of the transversely loaded fillet welds, without taking into account the 50 percent increase as discussed above

The relative proportioning of the transverse versus longitudinal weld, both in terms of length and throat size, will determine which of the two equations yields the larger value. For welds of the same leg size, whenever the transverse weld is at least one-third of the length of the longitudinal weld, the second equation will yield a higher value.

3.5.9 End Returns (Boxing)

End returns are the continuation of a fillet weld around the corner of a member as an extension of the primary weld. Boxing is the term preferred by AWS A3.0, but "end returns"

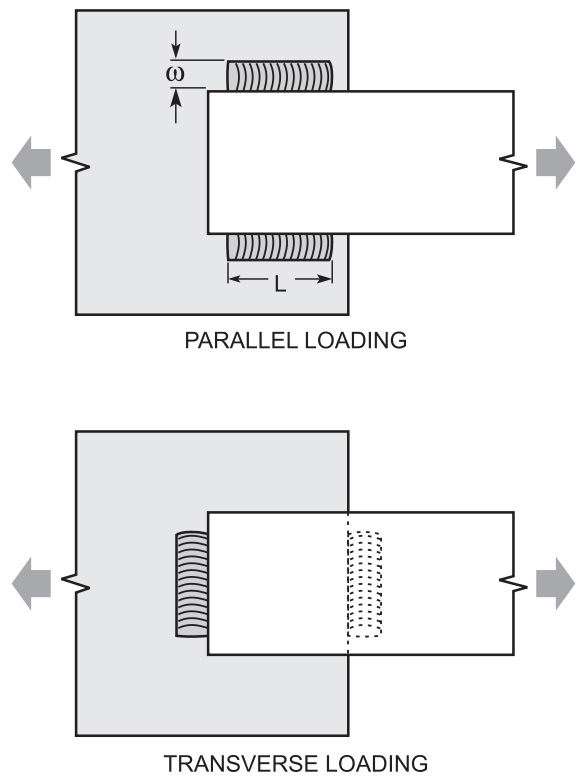

Figure 3–16. Longitudinal and transverse fillet welds.

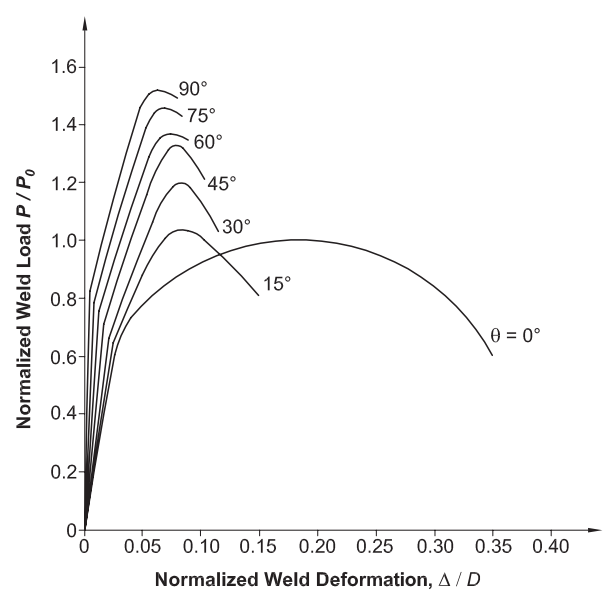

Figure 3–17. Deformative capacity and weld orientation.

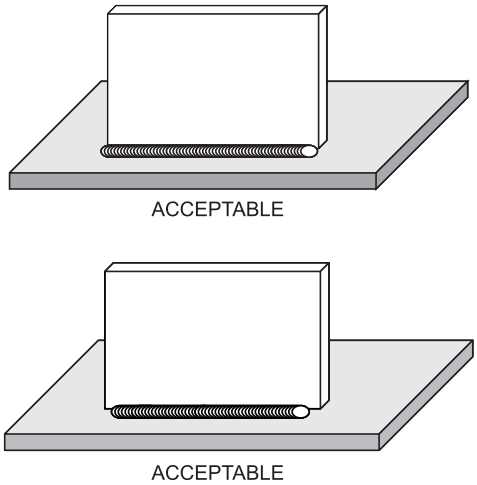

Figure 3–18. Acceptable weld terminations.

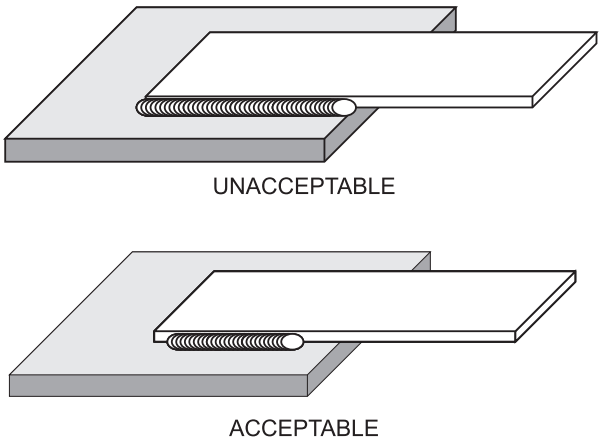

Figure 3–19. Weld termination for lap joints.

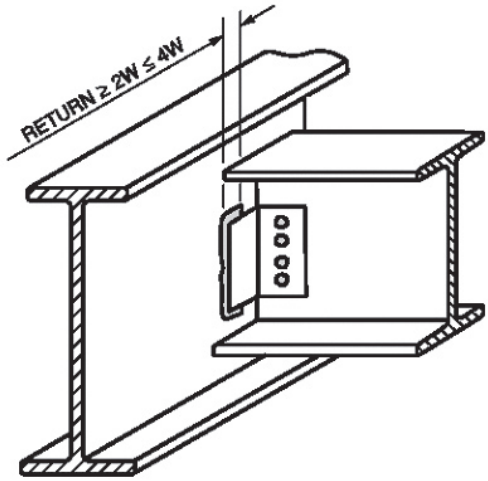

Figure 3–20. End return at flexible connections .

is the term used in both AWS D1.1 and the AISC Specification. End returns are used to ensure quality terminations to welds and to provide some resistance to prying of the weld roots. End returns may be included in determining the total weld length (AWS D.1.1, Provision 2.3.2.1). In general, end returns are neither prohibited nor required. When they are used, certain rules may apply.

3.5.10 Weld Termination (Fillet Welds)

The AISC Specification permits fillet welds to either extend to the end of the piece or to be stopped short approximately one weld size, except for some specific conditions where additional requirements apply (Figure 3–18). The preferred practice is to stop fillet welds short of the length of the joint. This has a simple, practical reason; carrying the weld out the full length of the joint increases the possibility of undercut and other weld quality problems. Formerly, the AISC Specification called for all welds to be held back one fillet weld size. This led to some problems wherein uninformed inspectors required the removal of the ends of welds that were full length, even when there were no quality problems. Thus, the current requirements permit either full length, or stopping short, except for the special conditions.

One of the special conditions is illustrated in Figure 3–19. For lap joints where one part extends beyond the edge of the other, the AISC Specification requires that the weld terminate not less than the size of the weld from the edge. This is to prevent the highly probable situation of the weld melting away the edge.

A second special condition involves attachments where flexibility is expected, as is the case with simple clip angle connections (see Figure 3–20). The AISC Specification requires that, when end returns are used, they not exceed four times the weld size, nor half the width of the part. This permits the unwelded portion of the member to flex. End returns are typically supplied for this situation to preclude straining about the weld root.

Another prescribed situation is for a fillet weld that joins transverse stiffeners to the webs of plate girders, as shown in Figure 3–21. For girders with thinner webs (≤ ¾ in. thick), and when the stiffeners are not welded to the flange (the typical case), the fillet welds joining the stiffeners to the webs are to be held back not less than four times nor greater than six times the web thickness. The hold-back dimension is measured from the toe on the web of the web-to-flange weld. Experience has shown that if this distance is not maintained, cracking can occur at the end of the weld during shipping of the girders, due to slight flexing of the web with respect to the flange. Providing this hold-back dimension gives the web some ability to flex and accommodate the strains imposed by shipping. This distance need not be maintained for heavier webs (which are stiffer), nor for situations where the stiffener is welded to the flange (because there is no relative

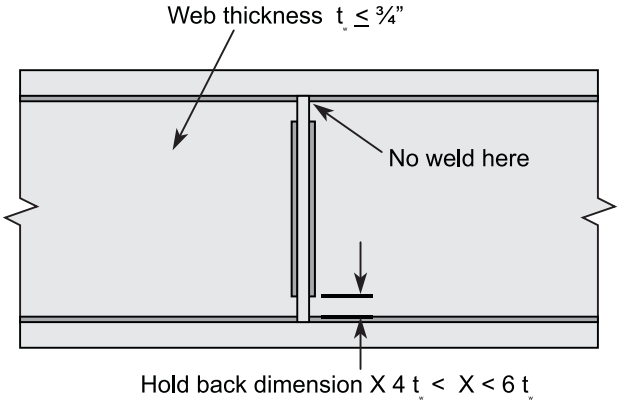

Figure 3–21. Hold-back dimension.

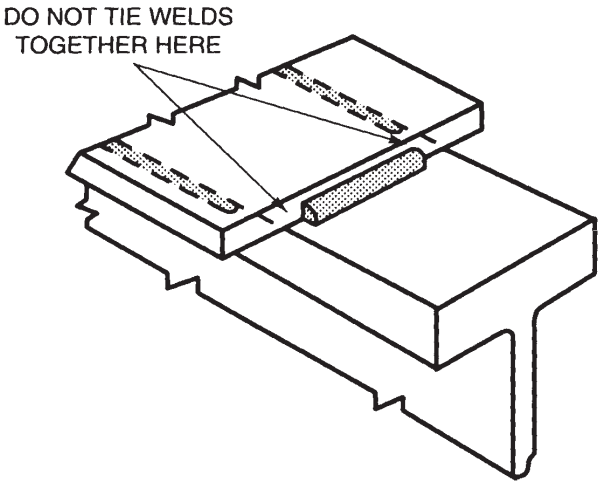

Figure 3–22. Welds on opposite sides of a common plane.

movement of the web with respect to the flange). Excessive hold-back dimensions may result in localized buckling.

The final example cited in the AISC Specification wherein welds must be terminated short is in the case of welds on opposite sides of a common plane, as shown in Figure 3–22. The reason for such interruption is again a workmanship issue; melting away of the edges is highly likely. Further, the short welds on the edges must be made out-of-position, and changes in welding procedure parameters will likely be required for these short welds.

3.5.11 Fillet Welds and Fitup

Under ideal circumstances, the two members that constitute the T-joint should be brought as closely into contact as possible before those members are joined with a fillet weld. Along the length of a T-joint, perfect fit is never possible, and so some small gaps will exist. As the size of the gap between the two members increases, and if the fillet weld leg size is kept the same, the actual weld throat decreases (Figure 3–23). Externally, the weld may look identical to that of a properly prepared joint, but an increased stress level results from the applied load on the decreasing throat size.

AWS D1.1 addresses this issue by requiring that the fillet weld size be increased by the amount of the gap if the fitup gap is greater than 1⁄16 in. (AWS D1.1, Provision 5.22.1). This principle is illustrated in the final schematic of Figure 3–23. AWS D1.1 also limits this option to gaps of up to 3⁄16 in. on materials less than 3 in. thick, and up to 5⁄16 in. for thicker materials. For larger gaps, other options are possible, but have not been addressed in a codified manner.

3.6 Plug/Slot Welds

A plug weld is a weld made in a circular hole in one member, fusing that member to another member. A slot weld is similarly defined, but involves a slot versus a circular hole. Both are uniquely applied to lap joints. Neither is particularly

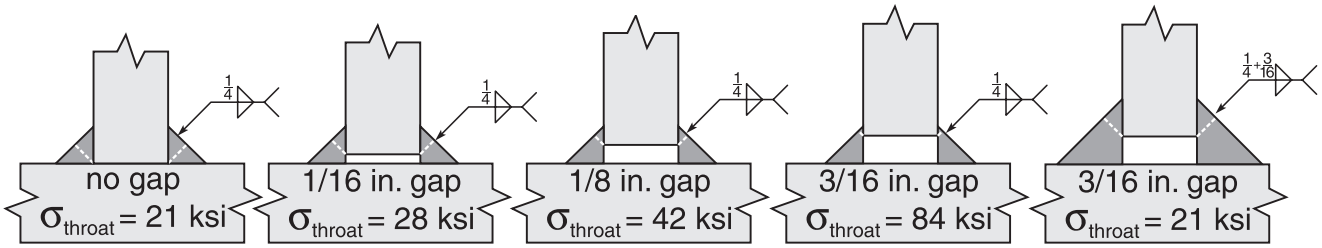

Figure 3–23. Effect of gap on weld throat.

Table 3–1. Interaction of Joint Types and Weld Types					
Joint Type	**CJP Groove Weld**	**PJP Groove Weld**	**Fillet Weld**	**Groove Weld/ Fillet Weld Combination**	**Plug and/or Slot Welds**
Butt	Yes	Yes	No	No	No
Tee	Yes	Yes	Yes	Yes	No
Corner-outside	Yes	Yes	No	No	No
Corner-inside	Yes	Yes	Yes	Yes	No
Lap	No	No	Yes	No	Yes

popular for structural applications, but a common example is for joining the center areas of column doublers to the column web to restrict buckling, particularly when deep columns are involved. Plug and slot welds are restricted to applications requiring transfer of load by shear or to prevent buckling of the lapped parts. They are not used to directly transfer tensile loads.

It is possible to have large circular holes and large elongated slots and to place fillet welds into the holes/slots. These are not plug and slot welds but are simply fillet welds.

The strength of plug and slot welds is determined by the nominal strength of the filler metal times the effective area of the weld, where the effective area is the nominal area of the plug or slot in the plane of the faying surface.

Detailing of such simple welds is more complex than one might expect. The dimensional requirements have been established to facilitate uniform fusion to the root of the joint. Specific requirements are outlined in the AISC Specification and AWS D1.1 and are not repeated here. However, the diameter of the holes and the width of the slots are required to be greater than the thickness of the member in which they are placed. Slot widths and spacing dimensions between such welds are also specified.

Plug and slot welds are required to fill the cavity in which they are placed when the plate thickness is ⅝ in. thick or less. For heavier material, the weld must fill at least one-half of the thickness of the material, but not less than ⅝ in.

When bolt holes do not align, it is tempting to consider using a plug weld instead. Several cautions should be considered before this is attempted. First, the hole/thickness relationship should be examined. Often, the hole diameter will not meet requirements. Next, the position of welding must be considered. Plug and slot welds are easily made in the flat position but are difficult to make out of position.

A related topic is that of filling mislocated holes. While this can be done successfully, more often than not, it is better to simply leave the hole open or insert a bolt in the hole and tighten it.

An arc spot weld, often called a puddle weld, is different than a plug weld. An arc spot weld is not made through a hole; rather, fusion between faying services is obtained by melting through one member into the other. Such welds are used to join steel decking to supporting steel, and are discussed in Section 3.13.1 of this Guide.

3.7 INTERACTION OF JOINT TYPES AND WELD TYPES

Not all welds may be applied to all details, limiting the weld possibilities for some joint types. For the four joints that are used in structural applications, the possibilities are given in Table 3–1.

3.8 SELECTION OF WELD TYPES

The best weld detail for a specific connection is one that reliably and safely transmits the imposed loads, and yet is economical and easily made by the welder. The selection process begins with consideration of the joint type and possible weld types, discussed above. The next step is to consider the nature of the loads involved, whether tension, compression, or shear. Then, the direction of tension or compression loading as compared to the weld axis must be considered. Finally, the magnitude of loading must be compared to the potential strength of each weld.

Table 3–2 can be used to evaluate candidates for various conditions. In some cases, multiple options exist. Typically, cost differences separate the various options, and Chapter 14 of this Guide provides helpful information in that regard.

As used in Table 3–2, the terms tension, compression, or shear are used to characterize the loading relative to the joint itself, not the loading on the weld. Ultimately, for example, all fillet welds are loaded in shear, but the loading on the joint may be in tension. In the case of the loading level (light versus heavy), the magnitude is not precisely or mathematically defined. It is shown simply to illustrate that should it be impossible to develop the required capacity in the joint with the light loading level, an option with more capacity exists.

Table 3–2 is applicable to statically loaded situations, typical of most building structures. For seismic and fatigue loading applications, other factors must be considered and this table may not be applicable to such situations.

Table 3–2. Weld Selection Based on Loading and Joint Type.					
Joint Type	**Force Type**	**Loading Level**	**Normal to the Weld Axis**	**Parallel to the Weld Axis**	**Shear**
Butt Joints	Tension	Light	PJP	PJP	
		Heavy	CJP	PJP	
	Compression	Light	PJP	PJP	
		Heavy	PJP with bearing considered, CJP	PJP	
	Shear	Light			PJP
		Heavy			CJP
Tee Joints	Tension	Light	Fillet	Fillet	
		Heavy	Fillet, PJP, PJP/Fillet, CJP	Fillet	
	Compression	Light	Fillet	Fillet	
		Heavy	PJP with bearing considered, CJP	Fillet	
	Shear	Light			Fillet
		Heavy			Fillet, PJP, PJP/Fillet, CJP
Corner Joints - Outside	Tension	Light	PJP	PJP	
		Heavy	CJP	PJP	
	Compression	Light	PJP	PJP	
		Heavy	PJP with bearing considered, CJP	PJP	
	Shear	Light			PJP
		Heavy			CJP
Corner Joints - Inside	Tension	Light	Fillet	Fillet	
		Heavy	Fillet, PJP, PJP/Fillet, CJP	Fillet	
	Compression	Light	Fillet	Fillet	
		Heavy	PJP with bearing considered, CJP	Fillet	
	Shear	Light			Fillet
		Heavy			Fillet, PJP, PJP/Fillet, CJP
Lap Joints	Shear	Light			Fillet, Plug/Slot
		Heavy			Fillet, Plug/Slot, Fillet/Plug/Slot

3.9 WELD DETAILS

3.9.1 Weld Tabs

Weld tabs are auxiliary pieces of material that extend beyond the ends of a joint, on which the weld can be initiated or terminated. If the weld is started on the tab, it is called a starting weld tab. Conversely, when welds are terminated on the tab, it is called a runoff weld tab. Colloquially, these devices are routinely called "runoff tabs," regardless of whether they are used for starting or terminating the weld. Weld tabs are most often associated with larger CJP groove welds, although they can be used with fillet welds and PJP groove welds that continue to an edge.

Weld tabs help to ensure that welds are terminated in a sound manner. They are to be aligned in a way that will provide for an extension of the joint preparation, i.e., a continuation of the basic joint geometry. The use of plates perpendicular to the axis of the weld, commonly known as "end dams," do not constitute weld tabs and should not be used at the end of a weld joint. For statically loaded structures, weld tabs are typically left in place, while for cyclically loaded structures, they are required to be removed. Weld tabs may need to be removed for aesthetic reasons, and when this is the case, contract documents must specify this requirement. In structures designed to resist high-seismic loads, the AISC Seismic Provisions (AISC 341) and the AISC Prequalified Connection Standard (AISC 358) define where weld tabs are required to be removed.

Weld tabs are not the same as weld backing (see Section 3.3.1 of this Guide), and removal of weld tabs does not require that backing be removed.

AWS D1.1 does not state when and where weld tabs are required, only that welds must be terminated in a sound manner. Furthermore, a minimum length for weld tabs is not prescribed. As a rule of thumb, weld tabs should be at least as long as the thickness (throat) of the groove weld, but this is neither required nor practical in some situations. It is advisable that the backing (when used) extend beyond the width of the joint by at least the length of the weld tabs.

Acceptable steels for weld tabs are defined in AWS D1.1. A variety of unacceptable materials have been inappropriately used over the years, including the twist-off ends of bolts, washers, electrode stubs, and air-arc gouging rod stubs. Only code-listed materials should be used.

3.9.2 Weld Access Holes

Weld access holes are holes that permit access, either for welding or for insertion of backing. A common example is found in the cuts provided in the web of a beam that is joined to a column; the top access hole permits backing to be inserted, and the bottom access hole permits the groove weld to be made as shown in Figure 3–24. Additionally, in some connection details, weld tabs may need to be installed in such openings. Weld access holes are known by various slang terms, including "rat holes" and "apple holes."

Weld access holes must be large enough to permit the welder to see the weld pool while welding, and to permit the weld to be cleaned and visually inspected between weld passes.

In addition to the practical function of providing access to the weld joint being made, weld access holes limit the interaction of the various residual stress fields. Consider a beam splice wherein no weld access hole has been provided, as illustrated in Figure 3–25. Furthermore, for this example, assume the vertical weld is tied into the flange-to-flange weld. Completely aside from the problem that the flange welds cannot be made under the web, notice that the longitudinal and transverse shrinkage of these two welds will cause triaxial tensile residual stresses that all meet at a point. Triaxial stresses reduce the local shear stresses and limit the local ductility (Blodgett, 1995).

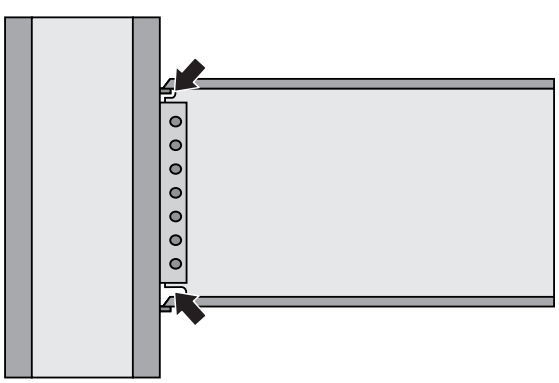

Figure 3–24. Weld access holes.

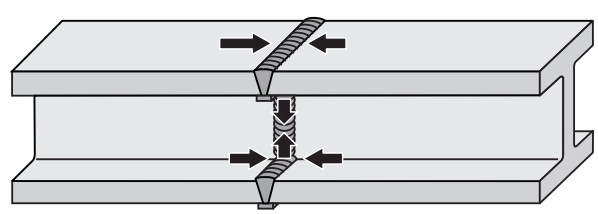

Figure 3–25. Beam splice without access holes.

When a weld access hole is provided, the stresses caused by the longitudinal and transverse shrinkage of the vertical weld are physically precluded from interacting with those of the flange weld, since there is no material at this juncture through which to transfer stress. Thus, biaxial versus triaxial stresses are present, encouraging the formation of shear stresses, which facilitate ductility and reduce the tendency for cracking. To limit the interaction of the multidirectional residual stresses, the AISC Specification imposes minimum weld access hole dimensions that may be considerably larger than would be needed simply for welding access.

Weld access holes must be made properly—with the proper size (height and width) and with smooth surfaces that are free of notches and gouges. Additional provisions apply for weld access holes in heavy sections, whether consisting of rolled shapes or built-up members.

3.9.3 Fillers

Fillers are steel plates inserted in a joint consisting of a thicker member and a thinner member being joined in a butt splice (Figure 3–26). Fillers are called "filler plates" in AWS D1.1, and "joint fillers" in AWS A3.0, and casually may be simply called "fill plates." These structural details, required for mechanically joined connections, permit butt splices to be made with fillet welds in conjunction with splice plates. Fillers may also be used to make connections that involve offsets in the joint.

Two different approaches are taken in the AISC Specification regarding the use of fillers, depending on the thickness of the plates used. If fillers are ¼ in. or greater in thickness, as shown in the first illustration of Figure 3–26, the filler is to extend beyond the edge of the splice plate and the fillet weld joining the filler to the thinner member should be sized to transmit the load through the filler plate.

For filler plates less than ¼ in. thick, the edges of the filler are made flush with edges of the splice plate, as shown in the second part of Figure 3–26, and the fillet weld is detailed assuming that no load is transferred through the fill plate. The total fillet weld size is the sum of the size required to transfer the load, plus the thickness of the filler plate, resulting in welds that at least appear to be disproportionately large.

While the rules of fillers are well developed, the use of such structural details today may be less common than a directly-welded connection in a butt configuration, as shown in Figure 3–27, which is typically less costly.

3.9.4 Welds and Mechanical Fasteners

There are a variety of connections wherein welds and mechanical fasteners such as bolts and rivets may be combined. For new construction, this may be the case where bolts are used to temporarily support a member until the welds have been applied. When existing structures are modified, existing riveted connections may need to be enhanced, and welds may be used to gain the extra capacity. Thus, an issue arises regarding the sharing of loads between welds and mechanical fasteners in a single connection.

AISC Specification Section J1.8 addresses the issue of welds in combination with mechanical fasteners, precluding the sharing of load in general but permitting load sharing under specific conditions. The general prohibition is due to the differences in the load/deformation behavior (i.e., strain compatibility) of mechanically fastened connections versus welded connections. Welded connections are stiffer than bolted or riveted connections. When welds and bolts are combined in a single joint, the welds will carry the load before the bolts load up and carry their full strength.

The issue is not as simple as just welds and mechanical fasteners. The orientation of the weld (longitudinal versus transverse) and the level of pretension in the bolt (snug-tightened or pretensioned) as well as the size and orientation of the bolt holes or slots, and the placement of the bolts within the holes all affect the behavior. The default and conservative perspective is to not assume load sharing, and to assume all the load is transferred through the welds.

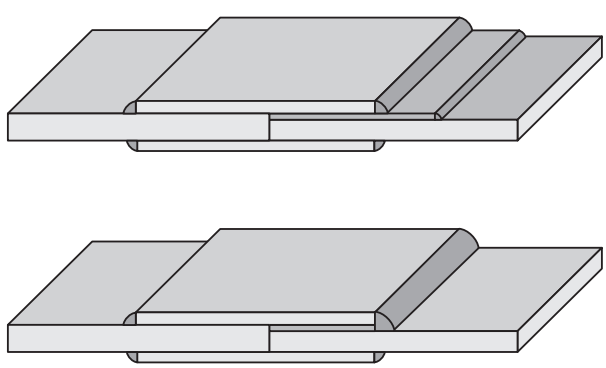

Figure 3–26. Filler plates.

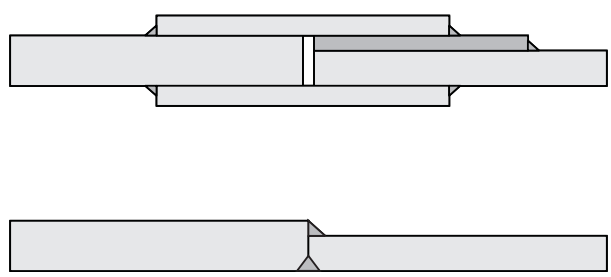

Figure 3–27. Use of filler plates vs. directly welded.

Two exceptions are detailed, however, in AISC Specification Section J1.8. The first exception permits load sharing between longitudinally loaded fillet welds and bolts in standard holes or short slotted holes that are transverse to the direction of load. The full strength of the weld can be applied, along with 50 percent of the available strength of a bearing-type bolt in the connection.

The second exception applies to alterations to existing structures with rivets or with high-strength bolts tightened to the requirements of slip critical connections. In such cases, the mechanical fasteners can be utilized for carrying existing loads, and the welds need only provide the additional strength required to carry the new loads. This different approach is taken for existing structures because it is assumed that the mechanical fasteners are already loaded in bearing.

The 2005 AISC Specification has changed on this subject from previous requirements, based on research results. More information on this topic is available, but it should be noted that the cited publications preceded the changes that were incorporated into the AISC Specification and do not fully reflect these changes (Kulak, 2002; Miller, 1998a and 1998b).

3.9.5 Strength of Welds in Combinations

The strengths of different welds types (groove, fillet, plug/slot) combined in a single joint may be added together to determine the strength of the connection (AISC Specification Section J2.5). However, the strength of a reinforcing (or contouring) fillet cannot be added to the strength of a CJP groove weld.

The strength of PJP groove welds with reinforcing fillet welds is not simply the mathematical sum of the strengths of the individual welds. Figure 3–28 illustrates the error that occurs when this is done. The throat dimension of the combination is the least dimension from the weld root to the weld face, with no allowance for any weld face reinforcement.

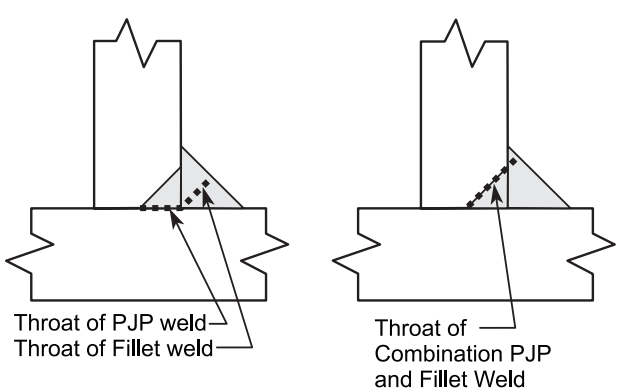

Figure 3–28. Combination of welds.

3.9.6 *k*-Area Detailing

Rolled structural shapes are often straightened in the mill by a process known as rotary straightening. This mechanical operation results in cold working of the web material near the flange, that is, near the point detailed as the "*k*" dimension. The zone of affected material extends approximately 1 to 1½ in. beyond the toe of the web-to-flange radius, and is thus called the *k*-area (Figure 3–29). This cold working increases the yield and tensile strength of the steel and decreases the ductility and notch toughness. Tests have demonstrated that this localized region does not impair the behavior of the structural member, but cracking can result when welding and thermal cutting is performed in this area (see AISC Specification Commentary Section J10.8, Bjorhovde, 2005, and Tide, 1987).

Welding in this region introduces heat, and when the weld and the surrounding area cool, shrinkage strains are introduced. The localized properties of the steel, combined with the welding operations, may cause cracking to occur during fabrication. The remedy is simple — do not weld in this area. Implementing this remedy, however, is sometimes complex.

The location and extent of the *k*-area must be understood. A common misunderstanding is that the *k*-area is the region of the radius only. This incorrect conclusion has led to detailing wherein welds were placed exactly in the region where their presence is restricted; the area of concern is not the radius, but the region beyond the radius, in the web, not the flanges.

The potential effect of the *k*-area must be considered when detailing column doubler plates and column stiffeners (continuity plates). Regarding column doubler plates, the first issue to be evaluated is whether it is more economical to use a heavier column section (more material cost) that eliminates the need for doublers, or to use a lighter column that requires doublers (more labor cost). This trade-off depends, of course, on the relative cost of steel and labor. When doubler plates are advantageous, they can be attached to the flanges with fillet welds, with a gap between the doubler and the

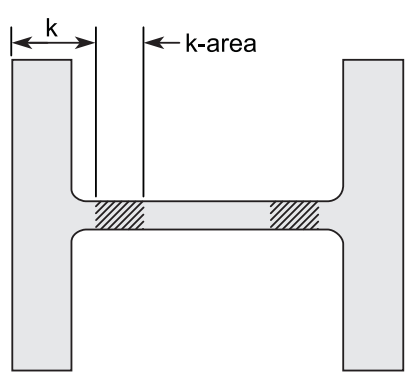

Figure 3–29. k-area detailing.

web (Hajjar et al., 2003). Most web doublers are fit tight to the web, however. Welds along the edges of the doubler that are placed on the radius are not in the *k*-area, although welds along the ends of the doubler must be stopped short in order to avoid welding in the *k*-area.

Regarding column stiffeners, the use of generous corner clips will ensure welding is not performed in this area. For smaller clips, welds should be terminated short of the *k*-area.

Details that mitigate concerns with the *k*-area are discussed in the AISC Specification Commentary Section CJ10.8.

3.10 LAMELLAR TEARING AND JOINT DETAILS

Lamellar tearing and preferred details are discussed in Section 5.4 of this Guide.

3.11 REQUIRED FILLER METAL STRENGTH

When the minimum specified tensile strength of the weld metal deposited from a specific filler metal is compared to the minimum specified strength of a base metal, three possible relationships exist; compared to the base metal, the weld metal may be lower in strength, about the same strength, or greater in strength. These three relationships are known as undermatching, matching, and overmatching. All compare the tensile strength, not the yield strength, and also compare the minimum specified properties, not the actual properties. Depending on the direction and type of the loading, matching strength may be required. In other situations, matching or undermatching strength is acceptable. The AISC Specification never requires overmatching filler metal, although some slight overmatching is permitted.

In situations where undermatching filler metal is acceptable, it can be used to limit cracking tendencies. When lower-strength welds are deposited, the stresses created as the weld metal cools and shrinks will be reduced. However, larger welds may be required.

The strength relationship of the filler metal compared to the base metal is based on tensile strength, not yield strength. Normally, for a given specified tensile strength, filler metal will have a higher yield strength than base metal. Thus, for matching strength, the filler metal yield strength is typically slightly higher than the base metal yield strength. This is a desirable relationship, as it encourages yielding to occur in the base metal, before it occurs in the weld.

The basis for strength comparisons is the minimum specified tensile strength, as would be listed in ASTM steel and AWS A5 filler metal specifications. If the steel, for example, is delivered with a significantly higher (but still within specification) strength, and the actual deposited weld metal is near the minimum specified strength, it is possible for the actual weld to undermatch the base metal, even though the combination is deemed matching when based on minimum specified properties.

AWS D1.1 lists matching strength, prequalified steel/filler metal combinations (Table 3.1). Careful examination of the material combinations listed in the table show that the listed filler metals are always equal to, or slightly higher than the minimum specified tensile strength of the steel. Normally, the strength of the filler metal classification is within 5 ksi of the minimum specified tensile strength of the steel, although exceptions exist.

When steels with different strength levels are joined, the basis for matching strength is determined with reference to the lower-strength steel. For example, if an ASTM A992 beam (Grade 50) is joined to an ASTM A913 Grade 65 column, matching strength filler metal would be E70, based on the ASTM A992 material (AWS D1.1, Provision 3.3).

From a practical viewpoint, nearly all filler metals today have a minimum specified tensile strength of at least 70 ksi, with a corresponding minimum specified yield strength of 58 ksi. Thus, undermatching is not a practical possibility unless the steel involved has a minimum specified yield strength of 70 ksi or more. Moreover, there is typically no need to utilize the undermatched filler metal for these lower strength applications.

The required strength relationships are defined in AISC Specification Table J2.5. This table not only defines where matching strength filler metal is required, and where undermatching is permitted, but also states that up to one standard filler metal strength level (e.g., 10 ksi) higher may be used and still be considered matching.

3.11.1 Matching Filler Metal

Matching strength filler metal is only required by the AISC Specification for two situations, and both involve CJP groove welds: first, for CJP groove welds loaded in tension (normal to the weld axis), and second, for CJP groove welds loaded in shear. A footnote to AISC Specification Table 2.5 identifies the second exception, stating where undermatching may be used. These exceptions are discussed in Section 3.11.2.

3.11.2 Undermatching Filler Metal

Undermatching filler metal may be used for welds in two general categories: those where the strength of the connection can be increased by making the weld larger (either longer, or with a larger throat, or both) and for CJP groove welds where the connection does not need to develop the full tensile strength of the joined material. PJP groove welds, fillet welds, and plug/slot welds are examples of the former; the strength of these welds can be increased by making the welds larger. For example, the throat dimension for PJP and fillet welds can typically be increased. Some CJP groove

welds fit into the latter category of situations where the full tensile strength of the joined material does not need to be developed.

AISC Specification Table J2.5 shows that, for all joints and loading conditions, undermatching filler metal is permitted for all PJP groove welds, fillet welds, and plug/slot welds. When required for the loads transferred through the connection, the throat dimension of PJP groove welds and the leg size of fillet welds can typically be increased to gain additional strength. Additionally, in some situations, the weld length can be increased. For plug and slot welds, the size of the weld can be increased (diameter for plug welds, and diameter and length for slot welds), and the number of such welds can usually be increased.

Also identified in Table J2.5 are CJP groove welds where undermatching is permitted, depending on the joint type and the condition of loading. CJP groove welds in butt joints, subject to tension normal to the weld axis, require matching strength filler metal as has been mentioned. The same weld and joint loaded in compression, however, can be made with weld metal with one standard filler metal classification increment (i.e., 10 ksi) less than matching. When CJP groove welds are loaded with tension or compression parallel to the weld axis, any degree of undermatching is permitted. CJP groove welds in the corners of box columns would be an example of this type of loading.

A footnote to Table J2.5 permits undermatching for some CJP groove welds loaded in shear, namely, for the longitudinal seam on built-up shapes where the web-to-flange welds transmit shear. Additionally, the footnote permits undermatching for CJP groove welds loaded in shear, where high restraint is a concern. When undermatching filler metal is used under the conditions of the footnote, the strength of the weld must be verified by determining the shear strength of the CJP groove weld made with the undermatching filler metal.

3.11.3 Overmatching

Overmatching filler metal is never required by the AISC Specification. Higher-than-necessary strength levels in the weld metal increase the residual stresses that will be present after welding and correspondingly increase cracking tendencies in and around the weld.

Filler metals with one standard strength level greater (i.e., 10 ksi) are permitted as indicated in note "a" in AISC Specification Table J2.5 and should not be considered as overmatching. Matching-strength filler metals for grade 50 steel (i.e., 50-ksi minimum specified yield strength, such as ASTM A992 and A572 Grade 50) are E70-series filler metals. The Table J2.5 footnote permits the use of E80-series materials. This is important for applications involving ASTM A588 (weathering) steel, as most of the filler metals that contain the required alloy to give to the weld deposit the same atmospheric corrosion resistance fit into this higher-strength classification category. These materials have been successfully used for many years, and the slight overmatch is accordingly permitted.

The most problematic potential consequence of overmatching occurs when welds are designed (sized) with overmatching weld metal. The strength of any welded connection depends on both the strength of the weld and the strength of the fusion zone. Consider a PJP groove weld that is made as long as the weld joint (Figure 3–30). Since the throat of the weld is the same size as the fusion zone, the location of failure will depend on the location of the weaker material, be it weld metal or base metal. If the weld overmatches the base metal, failure would be expected along the fusion zone.

Next, consider a situation where the PJP throat dimension is determined with an assumption of overmatching filler metal. This will naturally result in a smaller required weld throat dimension as compared to that required if matching material is used. As the throat dimension decreases, however, so does the fusion zone, yet the strength of the base metal remains unchanged. Thus, the connection will fail at a lower than expected value since the strength of the base metal will control. Most significantly, standard design procedures do not consider the base metal strength, since the assumption is that the weld metal throat will theoretically control. This is a conservative assumption, provided that matching or undermatching filler metal is used.

The same problem could occur with fillet welds, but only when the relative strength of overmatched weld metal is of at least 40 percent (e.g., 1/cos 45°, or 1.41) greater strength than the base metal, which is not likely to occur.

For some nonstructural applications such as pipelines, certain benefits have been postulated for the use of overmatching filler metal, but these approaches have not been applied to structural applications, and their relative transferability is uncertain at this time.

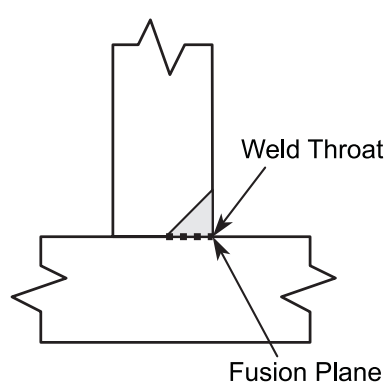

Figure 3–30. PJP groove weld throat versus fusion plane.

3.12 DETERMINING WELD STRENGTH

3.12.1 CJP Groove Welds

AISC Specification Table J2.5 identifies four loading conditions that might be associated with CJP groove welds, and shows that the strength of the joint is either controlled by the base metal or that the loads need not be considered in the design of the welds connecting the parts. Accordingly, when CJP groove welds are made with matching-strength filler metal, the strength of a connection is governed or controlled by the base metal, and no checks on the weld strength are required.

When CJP groove welds are made with undermatching filler metal as is permitted for specific joints and loading conditions (see AISC Specification Table J2.5, note c), the weld itself will theoretically control the connection strength. The option of using undermatching filler metal in CJP groove welds is limited to situations where loadings typically result in a limited level of stress on the welds.

3.12.2 PJP Groove Welds

The strength of a PJP groove weld is a function of the effective throat dimension ("E"), the length of the weld, the classification strength of the filler metal used, and the nominal stress level that may be applied to this type of weld. The strength of the welded connection is assumed to be controlled based on failure through the weld throat, in the deposited weld metal. For this weld type, the weld throat and the size of the base metal fused to the weld are the same, as shown in Figure 3–30. PJP groove weld strength is based on the strength of the weld metal, even though failure could theoretically occur in the base metal. The assumption of failure in the weld metal is valid when matching and undermatching filler metal are used. For these reasons, strength is based on the weld throat.

AISC Specification Table J2.5 identifies six loading conditions that might be applied to joints connected with PJP groove welds. Where the full loads must be transferred through the deposited weld metal (i.e., there is no bearing), the nominal stress F_w is determined as follows:

$$F_w = 0.60\ F_{EXX}$$

where

F_{EXX} = the electrode classification number, ksi

To obtain the nominal strength of the weld, F_w is multiplied by the effective area (A_w), which is the product of the effective length and the effective throat ("E"). The design strength for LRFD is then obtained by multiplying by ϕ, or the allowable strength is then determined by dividing by Ω.

3.12.3 Fillet Welds

Fillet welds may be applied to T- and lap joints, or to the inside of corner joints. Fillet welds may be added to PJP groove welds in T- and inside corner joints, increasing the connection strength. Finally, fillet welds may be added to CJP groove welds in T- and inside corner joints to provide for a more gradual intersection between the members. In such conditions, the strength of the fillet welds cannot be combined with that of the CJP groove weld.

Typically, the surfaces on which fillet welds are applied have a 90° orientation, but this is not always the case; such members may intersect at either a larger (obtuse) or smaller (acute) orientation. Fillet welds sizes are normally specified by prescribing the required leg size, but the theoretical strength is based on the throat dimension. See Figure 3–31.

To cover all these situations, the following relationship may be used to determine the weld throat:

$$t_w = w(\cos \Psi/2)$$

where

t_w = the weld throat
w = the weld leg size
Ψ = the orientation of the two surfaces involved.

For the common situation involving a 90° orientation, the relationship of the throat to the leg is that of cos (90°/2), or cos 45°, or 0.707.

The strength of the fillet weld is assumed to be controlled by the throat of the fillet weld. Because the throat is a smaller dimension (unless penetration beyond the weld root is con-

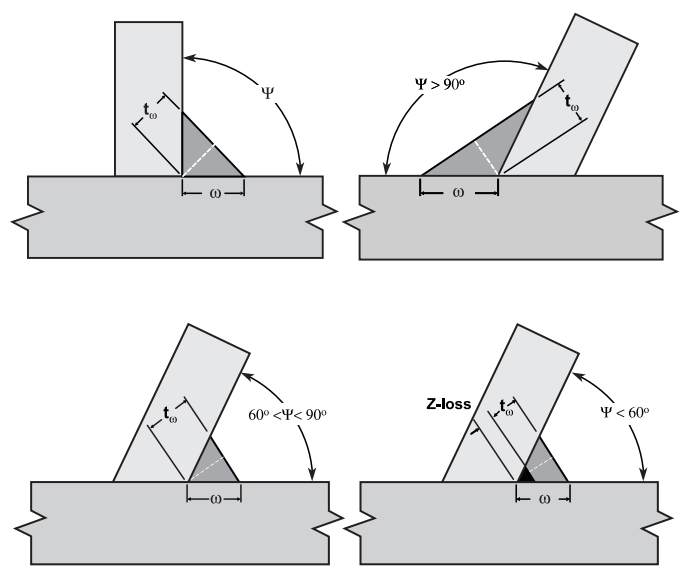

Figure 3–31. Fillet welds in skewed joints.

sidered, see Section 3.5.6) than the fusion zone, and given the requirements for the use of matching or undermatching filler metal, checks on the base metal for fillet welded connections are unnecessary.

For acute angles, as ψ decreases and drops below 60°, consistent fusion to the root of the joint becomes unlikely. To account for this, the Z-loss factor is used. Discussed in AWS D1.1 Table 2.2, the Z-loss factor is a function of the welding process and the included angle. The available weld throat is reduced by the amount of the Z-loss. Such losses must be considered as weld throat dimensions are determined.

AISC Specification Table J2.5 identifies two sets of loading conditions that might be applied to joints connected by fillet welds. The nominal stress F_w is determined as follows:

$$F_w = 0.60\ F_{EXX}$$

where

F_{EXX} = the electrode classification number, ksi

To obtain the nominal strength of the weld, F_w is multiplied by the effective area (A_w), which is the product of the effective length and the effective throat. The design strength for LRFD is then obtained by multiplying by ϕ, or the allowable strength is then determined by dividing by Ω. The full length of a straight weld, including the weld craters, is included in the effective length.

3.12.4 Plug/Slot Welds

Several plug welds, several slot welds, combinations of plug and slot welds, or combinations of these welds with other weld types (often fillet welds) are typically used to share loads. Plug and slot welds are used in lap joints and, when all the welds are on a single common plane, the strength of all the individual welds may be mathematically combined.

AISC Specification Table J2.5 identifies one loading condition that might be applied to joints connected by plug and slot welds (i.e., shear). The permitted nominal stress F_w is determined as follows:

$$F_w = 0.60\ F_{EXX}$$

where

F_{EXX} = the electrode classification number, ksi

To obtain the nominal strength of the weld, F_w is multiplied by the effective area (A_w), which is the nominal area of the hole or slot in the plane of the faying surface. The design strength for LRFD is then obtained by multiplying by ϕ, or the allowable strength is then determined by dividing by Ω.

3.13 SPECIAL WELDS

3.13.1 Arc Spot Welds (Puddle Welds, Deck Welds)

An arc spot weld, often called a puddle weld, is different than a plug weld. An arc spot weld is not made through a hole; rather, fusion between faying services is obtained by melting through one member into the other. Such welds are used to join steel decking to supporting steel. Arc spot welds may be made through single or multiple sheets of steel.

To help contain the weld pool, a "weld washer" may be used. When this is the case, the weld washer is placed on the surface of the sheet steel, and the puddle weld is made through the hole of the weld washer. When the weld is complete, the weld washer is left in place.

Puddle welds are typically governed by AWS D1.3, *Structural Welding Code—Sheet Steel*, which addresses design criteria for such welds. The diameter of the weld that can be seen (which is known as "d") is larger than the diameter of the fused interface, which is known as "d_e" or the effective diameter. The effective diameter can be found from the visible diameter from this relationship:

$$d_e = 0.7d - 1.5t$$

where

t = the thickness of the single sheet or two sheets of steel through which the arc spot weld is made

AWS D1.3 contains three potential limit states for arc puddle welds, two of which are based upon the ultimate strength of the sheet steel, not the weld metal itself.

3.13.2 Repair Welds

The term "repair weld" does not have a formal definition, but is used to mean

- Repairs to welds that did not meet acceptance criteria.
- Repairs to base metal that did not meet acceptance criteria (such repairs may be made by the producing mill, or by the fabricator).

The term may also be applied to various strengthening and retrofit activities that are applied to existing structures. The same term may be applied to welds used to repair base metal or welds that are damaged due to service loads such as fatigue, overload, or seismic events; topics that are covered in Section 12.8. For the purposes of this section, repair welds will be limited to welds used to correct welds or base metal that does not met acceptance criteria.

When a defective weld is made, the weld must either be repaired or the part replaced. Repairs to compensate for minor welding problems (undersized welds, limited porosity,

undercut, etc.) are routine fabrication activities. When major problems are encountered (lamellar tearing, delayed cracking, widespread porosity, etc.), it is desirable to attempt to determine the cause of the initial defect. Failure to do so will often result in duplicating the conditions that caused the initial problems. After the weld defect is removed and the repair weld made, most if not all of the evidence that could be used to determine causation is destroyed, precluding further analysis. Therefore, an investigation into the cause of cracking should begin before any repairs are initiated.

On partially erected structures, before any actual weld repairs are undertaken, the overall stability of the member or structure on which the repair will be performed must be verified. This is essential when repairs involve cutting and removing members that are already installed. Shoring, temporary bracing or other means of reinforcement may be necessary to ensure the safety of the workers and the structure during the repair.

The first step in repairing a weld that contains porosity, slag, or a crack, or when repairing a portion of base metal with a crack, fin, or lap, is to remove all the defective metal. This is typically done with grinding or air arc gouging. Complete removal of all the defective metal is essential. In the case of cracks, AWS D1.1 Provision 5.26.1.4 requires that the extent of cracking be determined with magnetic particle inspection (probably the best option for most situations), dye penetrant inspection, and acid etching or other methods. The full crack, plus 2 in. of sound material beyond the end of the crack, must be removed.

The resulting cavity created by the removal of the defective weld must provide a geometry conducive to good fusion. There must be ample access to the root of the joint, with enough width to the joint to allow for manipulation of the electrode. The ends of the cavity should gradually taper into the base or weld metal. The cavities that result from defect removal are typically U-shaped in cross-section. While not required by AWS D1.1, it is advisable to maintain a general profile similar to one of the prequalified U-groove details, which typically incorporate a minimum root radius of ¼ in. and a minimum included angle of 20°. The tapered ends, also not prescribed by the code, should be around 2.5 times the depth of the cavity. The cavity surfaces should be clean and free of notches and gouges.

Any of the welding processes may be used for repair, although special caution is in order when FCAW-S is mixed with other processes—see Section 3.13.6 of this Guide. SMAW is often used for weld repairs, in part due to the access provided by the process. Further, with fresh, properly dried covered electrodes with low hydrogen coatings, it is possible to achieve very low levels of diffusible hydrogen in the weld metal, offering increased resistance to cracking. Other processes, however, can and have been used successfully, and process selection depends on the circumstances surrounding the work, just as is the case for other welding applications. The contractor usually selects the process.

Because repair welding is typically done under conditions of more restraint, preheat may be increased for the repair. Sometimes, as an additional precaution, post heat is applied to diffuse any hydrogen from the joint.

A key principle to apply to a weld repair is to do everything right, so that only one repair attempt will be necessary. Each time a weld repair is reattempted, the conditions are more challenging and success less likely.

AWS D1.1 Provision 5.26 specifically discusses weld repairs, including when the engineer must be advised before a critical repair is to be made (see also Section 13.4 of this Guide), and such requirements are typically adequate to address repair welding requirements.

3.13.3 Seal Welds

A seal weld is defined as "any weld designed primarily to provide a specific degree of tightness against leakage" (AWS A3.0). The purpose of a seal weld may be to contain a fluid—either gaseous or liquid. In the structural field, seal welds are used most often not to prevent leakage out of a container, but to prevent entry of a fluid into a space where some type of harm, often corrosion, is expected to occur.

Seal welds may be specified on parts to be galvanized to prohibit pickling acids and/or liquid zinc from entering into a specific region. However, the American Galvanizer's Association (AGA) provides specific recommendations for venting, and discourages seal welds that enclose large areas. For steel designated as Architecturally Exposed Structural Steel that is to be painted, seal welds may be specified to prevent unsightly rust bleeding. Seal welds may be required for some applications where the sealed joint is more conducive to cleanup than an exposed joint would be. Food processing facilities are one such example.

A characteristic common to all of the aforementioned examples of seal welds is as follows: None of them are placed for traditional strength-related reasons, and for this reason, caution should be exhibited when seal welds are specified. In some cases, the application of a seal weld may result in a conflict of specification or code requirements or violate what is typically deemed good practice. For example, weld termination requirements may be violated by a requirement to apply seal welds, and small seal welds may violate the minimum fillet weld size requirements.

Seal welds may perform structural functions that were unintended, resulting in undesirable load paths. Seal welds may affect inspection practices, in particular, the interpretation of ultrasonic inspection results. If a part is to be hot dip galvanized, there is a tendency to call for seal welds all around, even though recommendations from the American Galvanizer's Association may suggest otherwise.

Perhaps the most damaging potential problem associated with seal welds is that they may be treated in a casual manner by those responsible for making them, resulting in weld quality problems.

When seal welds are required, the engineer and the contractor should work closely together to avoid possible problems (Miller, 1999b).

3.13.4 Tack Welds

A tack weld is defined as "a weld made to hold the parts of a weldment in proper alignment until the final welds are made" (AWS A3.0). AWS D1.1 requires that tack welds be made to the same quality requirements as the final welds, with a few exceptions that will be discussed. The definition does not indicate the length or size of a tack weld, but rather addresses the purpose of the weld. While tack welds are typically thought of as small and short, the definition does not preclude a tack weld that is a continuous weld in the root of a joint, nor does it mandate a certain maximum size for the tack weld. Under some circumstances, long or large tack welds may be desirable, and AWS D1.1 does not preclude their use.

Tack welds may be placed within the weld joint, and then subsequently welded over with the final weld. Alternately, tack welds may be made outside of the weld joint; examples would include brackets and strongbacks to hold pieces together, as well as tack welds outside the weld joint that hold steel backing in place. Tack welds made within the weld joint may be completely remelted and incorporated into the final weld metal. Alternatively, part or most of the tack welds may remain within the joint (i.e., they are not fully remelted), and thus become part of the final weld. Tack welds that are made outside of the joint and are left in place become part of the permanent structure. If this is not acceptable, tack welds may be removed after the joint has been partially or completely welded. The placement of the tack weld, its relationship to the fill passes in the weld, and its final disposition, all affect how the tack weld is to be treated.

A tack weld must be sufficiently strong to resist the loads that will be transmitted through it during handling, preheating, and welding. Some weldments have individual components that are massive, and the weight of such parts may be transferred through tack welds while the weldment is handled during fabrication. Careful sizing of tack welds that are used for this purpose is essential. Tack welds are often required to hold parts in alignment while assemblies are being preheated for final welding. Thermal expansion, the corresponding strains and resultant stresses may necessitate tack welds of significant strength. The strength of tack welds, like other welds, is proportional to the throat size and the length. Thus, a tack weld may be made stronger by making it with a larger throat or longer length, or both. A good practice is to make tack welds that are at least 2 in. long, or four times the thickness of the thicker part, whichever is greater (Bailey, 1973).

The basic concept behind remelted tack welds is that the subsequent weld passes will effectively eliminate all evidence that the tack weld ever existed. Accordingly, it is reasonable that the quality criteria for a tack weld that will be remelted would be less rigorous than for the situation where the tack weld is incorporated into the completed weld without remelting. This is reflected in AWS D1.1, which does not require preheat for tack welds that are remelted by submerged arc welding. Additionally, removal of discontinuities such as undercut, unfilled craters, and porosity is not required before the final SAW.

When the intent is to remelt the tack weld, then it should be made with a geometry that is conducive to remelting. Relatively small tack welds are more readily remelted. To gain the required joint strength with tack welds that will be remelted, it is best to make small welds that are longer in length. Not only will this encourage remelting of the tack weld, it also minimizes the tendency to disrupt the surface appearance of the final weld.

When tack welds are placed within the joint and not fully remelted, they become part of the final weld. When this is the case, the tack weld should be treated like the root pass of a final weld, including being made in accordance with an applicable WPS, and meeting standard workmanship requirements. The WPS should list preheats, filler metals, WPS parameters, and other variables, just as are required for root passes and fill passes. This does not mean, however, that tack welding variables must be identical to those that will be used for the fill passes. For example, SMAW is commonly used for tack welding, while FCAW is used for the fill passes; this is an acceptable practice.

A major shift in thinking is required when tack welds are to be incorporated, versus the remelted alternative. For example, incorporated tack welds should be made of a size and with a heat input level that will ensure good fusion and a moderate cooling rate. These welds should meet the minimum size requirements that would be imposed on any final weld. This will normally result in a preference for larger-sized tack welds than would be encouraged for remelted tack welds. Thus, for a required joint strength, incorporated tack welds will be larger in size, but perhaps shorter in length, as compared to the tack welds that are expected to be fully remelted.

Large, intermittent tack welds may require that the gaps between the tack welds be welded before the subsequent weld layers are made. Welding over large, intermittent tack welds may disrupt the arc or affect the appearance of the subsequent final weld. The ends of the tack weld may be points where fusion into the weld root is difficult to achieve. Thus, the acceptable geometry of the tack weld depends on the ability of the final weld procedure to properly incorporate the tack weld into the final weld. This is the reason, for example, that Provision 5.18.2.1 of AWS D1.1 requires that multipass tack welds have cascaded ends.

When tack welds are placed outside the weld joint, other factors must be considered. These welds should be made with materials, procedures, techniques, and quality levels that would be acceptable for final welds. Tack welds outside the weld joint fit into two categories: permanent and removed.

AWS D1.1 permits tack welds to remain on statically loaded structures, unless the engineer requires them to be removed. For cyclically loaded structures, such tack welds are required to be removed. Tack weld removal is typically done by grinding.

3.13.5 Temporary Welds

A temporary weld is defined in AWS A3.0 as "a weld made to attach a piece or pieces to a weldment for temporary use in handling, shipping, or working on the weldment." The term "temporary" implies that these welds have a limited life. Thus, the weld that joins a lifting lug onto a weldment could be either a permanent weld (if the lug was to remain in place for future handling of the weldment) or a temporary weld (if the lug was to be removed after handling the weldment). In these two situations, the welds may be otherwise identical, but they are called by different names.

Temporary welds are required to meet all the same quality criteria as final welds.

When temporary welds are removed, it is important that the weld be fully removed without damaging the base metal. A common approach is to thermally cut the weld or attachment off (using air arc gouging, oxyfuel cutting, or plasma cutting) and follow up with grinding. When cutting is performed too close to the final surface, one may inadvertently gouge the base metal. If base metal is accidentally removed, it is typically restored by welding.

3.13.6 Compatibility of Weld Metals

For the carbon and low-alloy steels used in building construction, weld metals from various filler metals and processes can be freely intermixed in a single joint, with one noteworthy exception and a few general precautions. Such intermixing may result from the use of one filler metal or process for tacking, another for the root passes, and yet another for the fill passes. Furthermore, should such welds require repair, yet another filler metal or process may be added to the mix. Within the category of carbon and low-alloy steels, and given typical steels used in construction today, such intermixing of processes and filler metals is acceptable since all involve carbon-manganese-silicon metallurgical systems.

The notable exception is the use of FCAW-S, which relies on a different metallurgical system to obtain the required properties. Some FCAW-S weld deposits, but not all, may combine with other weld deposits, resulting in a final weld with decreased notch toughness properties. Other properties (yield and tensile strength, elongation) are insignificantly affected. This phenomenon is discussed in Section 2.3 of this Guide.

A few general precautions are also in order when intermixing of different weld processes is involved, although such concerns are generally contractor related workmanship and quality issues. Under some conditions, a slight difference in the slag systems of various electrodes may cause some slag removal difficulties when one filler metal is intermixed with another. In other cases, porosity may result. Such difficulties, however, are typically resolved easily, and concerns about these issues are adequately addressed in AWS D1.1.

3.14 SPECIFIC REQUIREMENTS FOR VARIOUS JOINTS

For some joints, regardless of the type of weld and weld details utilized, certain principles apply. Joint-specific requirements or concepts that should be considered are listed below.

3.14.1 Butt Joints

Width and Thickness Transitions

When butt joints are made between members of unequal width or thickness (or both), the joint should be axially aligned. When tensile stresses in such connections are greater than one-third of the nominal design tensile stress, the stress concentration must be reduced. Typically, thickness transitions are accomplished by cutting a bevel on the thicker member, although it is permissible to build up the thinner member with weld metal. Such transitions are not required for joints in compression.

Design and detail drawings must show where such tapered transitions are required so that this detail can be incorporated into shop drawings.

3.14.2 Corner Joints

Box Sections and Corner Joints

A common use of corner joints is in box sections. Appropriate weld details for boxes must consider access to the inside of the box. Small boxes, where personnel and equipment cannot physically enter the box, require that all welding be done outside of the box, eliminating two-sided options. Even when access inside the box is possible, local environmental conditions must be considered. High preheat requirements may preclude internal access. Tight enclosures may preclude adequate ventilation for the welder.

Details to resist lamellar tearing should be considered when large welds are applied to corner joints, as discussed in Section 5.4 of this Guide.

3.14.3 T-Joints

Skewed T-Joints

Most T-joints intersect at 90° angles. When the T-joint is skewed, special consideration must be given to both the acute and obtuse side of the joint.

On the obtuse side, as the dihedral angle (ψ) increases, the fillet weld throat becomes disproportionately small for the weld leg size (*w*), and PJP groove welds become more economical (Figure 3–32). On the acute side, decreases in the dihedral angle will cause the weld to have incomplete fusion to the weld root. To account for this, the Z-loss factor is applied. Discussed in AWS D1.1 Table 2.2, the Z-loss factor is a function of the welding process and the included angle. The available weld throat is reduced by the amount of the Z-loss. Such losses must be considered as weld throat dimensions are determined.

Definitive recommendations for handling all these details is beyond the scope of this Guide, although the literature does cover these subjects (Miller, 2002; Kloiber and Thornton, 2001).

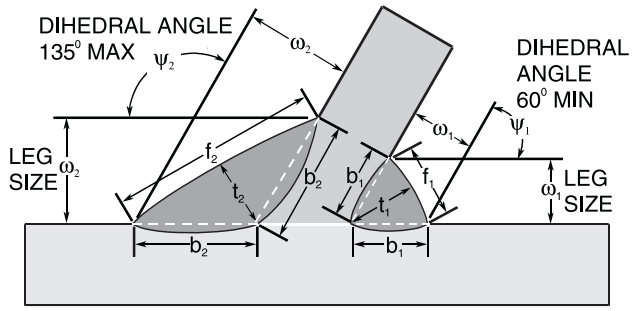

Figure 3–32. Equal throat size ($t_1 = t_2$).

3.14.4 Lap Joints

Longitudinal Fillet Welds

For lap joints wherein only longitudinal welds are used for the connection, the length of the fillet weld is to be no less than the transverse spacing between the two welds (AISC Specification J2.2b)—see Figure 3–33. This addresses a shear lag issue, ensuring that an adequate length of weld is available for the load to transition between the two members.

Minimum Overlap Distance

The minimum overlap distance between lapped members should be no less than five times the thickness of the thinner member (AISC Specification J2.2b)—see Figure 3–34. This ensures that there will not be unacceptable rotation in the connection when it is loaded.

Welds from One Side Only

If welding is applied to only one side, tensile loading will be concentrated in the weld root—see Figure 3–35. To ensure that this does not occur, other welds that can be made from one side, like plug or slot welds, may be added. Alternatively, some type of mechanical support that prevents straining of the weld root may be utilized (AISC Specification J2.2b).

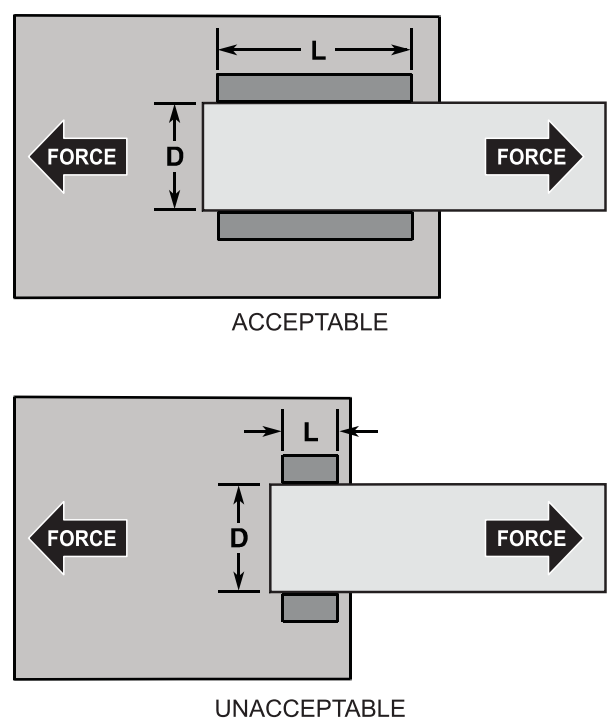

Figure 3–33. Importance of transverse spacing.

3.15 WELDING SYMBOLS

Welding symbols are used as a systematic means of communication, identifying welding-related information in a graphical manner. Weld symbols are miniature, schematic

representations of the types of welds to be made. In the structural steel industry, welding symbols are put onto various drawings to specify the welds that are intended. Furthermore, welding symbols are routinely applied to the actual steel members so that shop and field welders know which joints are to receive the various weld types. Welding symbols are sometimes referred to as "weld callouts."

AWS A2.4, *Standard Symbols for Welding, Brazing and Nondestructive Examination,* defines practices for the use of such symbols. The AISC *Steel Construction Manual* contains a summary of basic welding symbols and also contains a copy of the various symbols for the prequalified groove weld details.

Welding symbols take on a format as shown in Figure 3-36. The symbol includes, at a minimum, a reference line and an arrow. Optionally, there may be a tail, applied to the end of the reference line opposite the arrow end. The arrow points to the joint. The weld symbol designates the type of weld (fillet, PJP, CJP, etc.).

Weld symbols shown above the reference line indicate that the weld is to be applied to the "other side," that is, to the side opposite of the one to which the arrow points. Conversely, weld symbols below the reference line refer to the "arrow side." The arrow may point up (as compared to the reference line) or down. Regardless of the direction in which the arrow points, the significance of "arrow side" and "other side" remain unchanged.

Welding symbols are always read right to left. This is true for arrows that leave the left or right side of the reference line. A common error is to create a welding symbol with the assumption that the direction of reading is from the arrow to the tail, but symbols are always (properly) created to be read right to left.

When groove welds are required, the contract drawings need only specify "CJP" or PJP," as applicable, in the tail of the welding symbol. This leaves the fabricator or erector with the option of selecting the type of groove weld (bevel, V, U, or J), as well as the specific dimensions. This information is required to be included on shop drawings.

According to AWS D1.1, a welding symbol without dimensions and without CJP in the tail "designates a weld that will develop the adjacent base metal in tension and in shear" (AWS D1.1, Provision 2.2.5.3). This permits the connection detailer to select among CJPs, PJPs, fillet welds, or combinations of these welds to satisfy these requirements. When only CJPs are acceptable, the designer should specify that condition in the welding symbol.

For PJP groove welds, contract document drawings need only specify the effective throat ("E") that is required. Shop drawings must show the required weld groove depth ("S") that is required to achieve the "E" dimension, based on the included angle, process, and position of welding. With respect to PJP groove welds, perhaps the most common error is to omit the effective throat size "E" from design drawings.

A commonly misused portion of a welding symbol is the weld-all-around symbol. The alternative is to point to each joint that is to be welded, and this approach is more time consuming. However, in many cases, the intent of the designer is not for a weld all around the member, despite what the symbol indicates. Consider, for example, a stiffener with corner clips, intended to be welded to a wide flange beam with a pair of fillet welds to the web, and two fillet welds to each of the flanges (for a total of six fillet welds). If the welds are all the same size, it is easy to point to the three joints, and use the weld-all-around symbol. Yet, in doing so, the designer has called for welds that extend for the full length of the joints (e.g., no weld hold-back dimension—see Section 3.5.10) and, additionally, has called for welds along the edges of the stiffeners. Instead of using the weld-all-around symbol, fillet weld symbols on both the top and bottom of

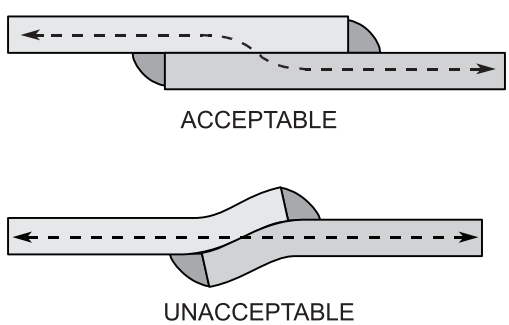

Figure 3–34. Importance of minimum overlap dimension.

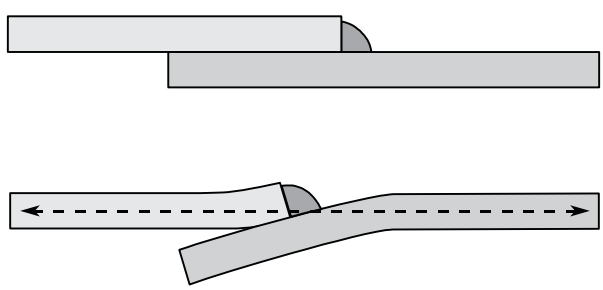

Figure 3–35. The problem of welds on one side only.

the reference line, with arrows pointing to the three joints, will eliminate this problem.

Welding symbols can also be used to signify the type of NDT that is to be performed.

Several common mistakes have already been mentioned. Other common mistakes typically involve the accidental substitution of a similar looking symbol. Points of confusion include fillet welds versus bevel groove welds, and plug or slot welds versus backing versus spacers. Perhaps the most unfortunate situation occurs when extremely complicated welding symbols are used. Even when technically correct, they may lead to considerable confusion. In a complicated situation, a sketch of the weld detail can be added to the tail of the symbol, or referenced in the same location, minimizing the potential for misunderstandings.

3.16 SAMPLE CALCULATIONS

The AISC *Steel Construction Manual* (AISC, 2005) and the companion document AISC *Design Examples* (AISC 2005e) provides recommendations and example calculations for various welded connections. The examples are presented in both LRFD and ASD formats.

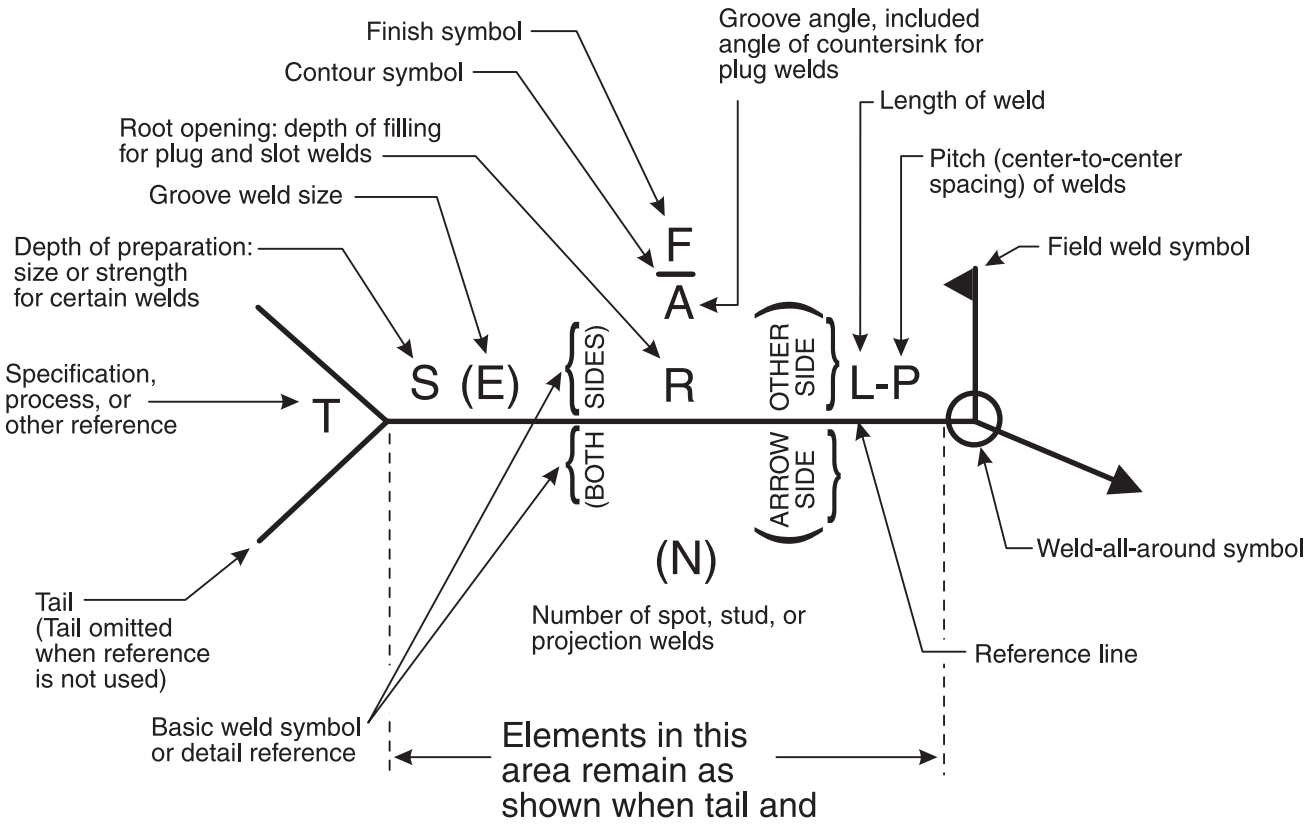

Figure 3–36. Weld symbols.

4. Metallurgical Issues

4.1 INTRODUCTION

Many metallurgical issues are associated with steel construction. This chapter will focus on welding-related metallurgical issues in steel construction.

4.2 STEEL—PROPERTIES OF INTEREST

Various types of structural steel are classified, or graded, based on a variety of properties, but one primary property of interest to the engineer is the minimum specified yield strength. Some steel grades also have a maximum limit on the yield strength. Additionally, steel grades have minimum specified tensile strengths, or tensile strength ranges. Minimum levels of ductility, measured in terms of elongation, are also specified. Minimum notch toughness levels, as measured in the Charpy V-notch test, generally are supplemental requirements that must be specified, if desired, when the steel is ordered.

From a welding perspective, the yield strength and tensile strength are important for filler metal selection. Filler metals, as compared to the base metals, may be matching, undermatching, or overmatching. These topics are discussed in Section 3.11 of this Guide.

The ductility of steel is important, as ductility enables the steel to deform to accommodate the shrinkage strains that will naturally occur as the weld metal and hot surrounding base metal cools and shrinks. Ductility, as measured in an unrestrained, uniaxial tensile specimen, can be misleading. Elongation measurements of 20 percent or more are measured in specimens that are free to locally neck down, and such measurements include the material's behavior after the load-carrying capacity has begun to diminish due to necking. This extensive ductility cannot be depended upon in design, nor will it always be experienced in the actual structure, since multidirectional tensile stresses reduce the available shear stresses that result in ductility (Blodgett, 1993, 1995; Barsom and Rolfe, 1999; Gensamer, 1941). Nevertheless, ductility permits the steel to strain without fracture, whether such straining is due to the shrinkage of welds or applied loads.

In addition to the mechanical properties mentioned above, the steel composition limits are part of the classification. The chemistry of the steel plays a critical role in determining the ease with which a steel can be welded. Steel material specifications have maximum compositional limits imposed on certain elements. Generally, excessive quantities of these elements cause problems. For example, maximum limits usually are placed on sulfur and phosphorous since excessive quantities can adversely affect the properties of the steel and can lead to cracking of welds. Steel material specifications may impose minimum specified levels for certain alloys, since very low levels can cause other problems. Some alloys are specified with both minimum and maximum levels, as either extreme can be problematic. Alloys that must be present in the steel are specified, but for steel classifications where a specific alloy is unlisted, the element may or may not be present. In other words, unlisted alloys are uncontrolled.

Carbon is the most important ingredient in steel, and maximum limits on the carbon content are typically specified. Specification of minimum levels of carbon is typically unnecessary, as the minimum specified yield and tensile strength requirements dictate that some carbon must be present.

"Weldability" is a term that is used to describe the relative ease with which a material can be welded (ASTM, 1998). Weldability should not be confused with the term "weldable"; many materials are weldable (i.e., they can be welded), but weldable materials may not have good weldability. Materials with good weldability can be successfully welded without unusual precautions. Conversely, when materials require special techniques such as careful control of preheat and interpass temperature, they are said to have poor weldability.

The most significant steel property of interest in welding is the chemical composition, as this will determine both the weldability of the steel and the sensitivity of the steel to various welding-induced cracking phenomena. Additionally, a portion of the steel is intermixed with the metal supplied by the filler metal to form the weld metal. The steel may add alloys not present in the filler metal to the weld, or increase the level of such alloys—this is called alloy pickup. Conversely, additions of the base metal to the weld metal may reduce the level of alloy present—this is called dilution. The addition of base metal to the weld metal, regardless of whether pickup or dilution is involved, is called admixture, and the level of admixture will determine how significant any difference in weld metal chemistry will be.

Although not a metallurgical issue per se, steel material specifications also include limits on various tolerances that may affect welded connection details. Allowance must be made for variations permitted by the specifications, and certain weld details are helpful in this regard. For example, in a beam-to-column moment connection, flange tilt for the column will create a variable gap along the length of the joint. A groove weld detail that utilizes steel backing can help accommodate these variations.

4.3 DESCRIPTIONS OF STEEL GROUPS

4.3.1 AWS D1.1 Prequalified Steels

AWS D1.1 Table 3.1 lists prequalified steel grades—materials that may be used with prequalified welding procedure specifications without qualification testing. These are steel grades with a history of satisfactory service and with known, good weldability. Newer steels are constantly being added to this list. Being new, they may not have the same historic record of successful usage, but they have nevertheless undergone testing and analysis before being included. It is highly recommended that prequalified steel grades be specified when welding is anticipated.

All of the prequalified steels have a minimum specified yield strength of 90 ksi or less. This is consistent with the AWS D1.1 philosophy that prequalified welding procedure specifications are limited to steels of 90 ksi yield strength or less. All of the listed steel grades have both mechanical property controls and compositional limits that are appropriate for the welding processes and conditions specified within the code.

4.3.2 AWS D1.1 Approved Steels

Contained in AWS D1.1 Annex M is a list of approved steel grades. These steel grades cannot be used with prequalified welding procedure specifications, as they have minimum specified yield strengths that equal or exceed the 90 ksi yield strength limit for prequalified WPSs. Nevertheless, these steel grades have a history of satisfactory usage and, when higher strength steels are required, should be considered when welding will be used.

4.3.3 AWS D1.1 Unlisted Steels

Steel grades not listed in Table 3.1 or Annex M of AWS D1.1 are known as unlisted steels. A steel grade may be unlisted for several reasons. The steel may have poor weldability and as a result it has been deliberately omitted. Alternatively, the steel grade may be new and may have good weldability, but simply has not yet been incorporated into the code. Some steel grades are excluded, not because of poor weldability, but because their mechanical properties are not sufficiently defined. This is the case for the AISI/SAE grades of steels, wherein only chemical compositions are specified. Finally, AWS D1.1 only recognizes steels classified to U.S. standards, such as ASTM and API (American Petroleum Institute) standards. Steels classified by other standards may have excellent properties, although they have not been incorporated into AWS D1.1, which is primarily a U.S.-based standard.

Two approaches may be taken with unlisted steel grades, depending on whether prequalified or qualified WPSs are used. AWS D1.1 Provision 3.6 permits the use of prequalified WPSs for welding on unlisted steels when such steels are used for auxiliary attachments, when approved by the engineer, and/or when the unlisted steel has a chemical composition that falls within the limits of one of the prequalified steel grades listed in Table 3.1.

WPSs for welding on unlisted steels may be qualified by test. The WPS qualification tests prescribed in AWS D1.1 Section 4 are not weldability tests per se. The degree of restraint associated with these test plates is usually not sufficient to replicate actual fabrication conditions.

A number of true weldability tests have been developed to evaluate the sensitivity of the weld or heat-affected zone (HAZ) to cracking. Each has advantages and limitations. Some tests are better at detecting cracking in the weld itself while others are more HAZ-related. Commonly used tests include the Lehigh Restraint test, Tekken test, Controlled Thermal Severity (CTS) test, and the Gapped Bead On Plate (G-BOP) test (ASM, 1997).

4.3.4 AISC Specification Treatment of Unidentified Steels

The AISC Specification (in Section A3.1b) permits the use of unidentified steels for "unimportant members or details where the precise physical properties and weldability of the steel would not affect the strength of the structure." In order to comply with both the AISC Specification and AWS D1.1, either the unidentified steel must comply with the AWS requirements for unlisted materials, or the WPS must be qualified by test.

4.4 WELDING REQUIREMENTS FOR SPECIFIC STEELS

4.4.1 Weathering Steels

Weathering steels include those able to resist atmospheric corrosion, precluding the need for paint or coating systems. Included in this category of steels are ASTM A588, A852, A847, A514, and A517, as well as the first weathering steel A242 (which is nearly obsolete). A relatively new addition to this group is HPS 70W (high-performance steel), which is currently classified in the ASTM A709 Specification. Each of these has specific fabrication requirements, but the general provisions applicable to this group of weathering steels will be reviewed. These steels all contain sufficient alloy content to offer resistance to atmospheric corrosion. Popular for bridge construction, weathering steels have also been used for buildings, amphitheaters, light poles, transmission towers, and other structures.

A special requirement associated with welding weathering steels in general involves the selection of the filler metals, with specific focus on ensuring the weld has atmospheric corrosion resistance equal to that of the base metal. One of

Table 4–1. Properties of Q&T and QST Steel					
Steel Specification		**Minimum Specified Yield Strength (ksi)**	**Minimum Specified Tensile Strength (ksi)**	**Processing Method**	**D1.1 Coverage**
API 2Y	Gr 42	42–67	62 min.	Q&T	Prequalified (Table 3.1)
	Gr 50	50–75	65 min.		
	Gr 60	60–90	75 min.		
ASTM A709	HPS 70W	70 min.	90–110	Q&T	
ASTM A852	--	70 min.	90–110	Q&T	
ASTM A913	Gr 50	50 min.	65 min.	QST	
	Gr 60	60 min.	75 min.		
	Gr 65	65 min.	80 min.		
ASTM A514	>2 ½ in.	90 min.	100–130	Q&T	Code Approved (Annex M)
	≤2 ½ in.	100 min.	110–130		

two approaches may be taken. First, all welds on weathering steel structures may be made with alloy filler metals that deposit weld metal with a sufficient alloy content so that the deposit has a weathering composition. While a variety of alloys may be used, the common choice today is to use nickel-bearing filler metals, typically with a nominal nickel content of 1 percent or greater. Prequalified filler metals for prequalified weathering steels are listed in AWS D1.1 Table 3.3.

A second approach may be used to achieve a weathering weld deposit under specific conditions, and it involves the use of carbon steel filler metals. During welding, some of the weathering steel base metal melts and becomes part of the weld deposit. Smaller single pass fillet welds, for example, experience sufficient admixture (mixing of base metal and filler metal) to give the resultant weld enough alloy to have weathering characteristics. The level of admixture depends on the welding process in addition to the weld size. AWS D1.1 prescribes the conditions, by maximum weld size and by process, under which this approach may be used. It may allow the contractor to employ filler metals that are used for standard carbon steel applications.

On occasion, weathering steels may be specified and yet the structure is still painted. When this is the case, special atmospheric corrosion resistance is not required for the weld, and no special filler metal considerations with respect to weld metal composition are required or justified.

4.4.2 Quenched and Tempered Steels

A variety of steels are processed at the producing mill by quenching and tempering (Q&T). The quenching operation hardens the steel, while the tempering operation increases its toughness and ductility. One of the first popular Q&T steels was ASTM A514, which is a martensitic steel with 100 ksi minimum specified yield strength. ASTM A514 can be, and is, successfully welded every day, but it can be problematic when the proper procedures are not followed. This background is provided to explain a common, albeit inaccurate, perception of quenched and tempered steels: They are often assumed to be high strength, martensitic, and hard to weld. As will be seen, for some Q&T steels, none of these characteristics apply.

In addition to Q&T steels, there are quenched and self-tempered (QST) steels. Steel shapes made by this process are quenched in a traditional manner, but the quenching does not cool the entire cross-section of the shape. The residual thermal energy in the core of the shape then tempers the quenched outer surfaces of the shape without the application of additional thermal energy, that is, the material is self-tempered.

AWS D1.1 lists various Q&T and QST steels. Table 4–1 demonstrates that such materials are vastly different, and while the materials are processed similarly, their properties and ease of welding vary considerably.

In some cases, AWS D1.1 specifies requirements that apply only to quenched and tempered steels. These provisions were originally applied to ASTM A514 and A517, a similar steel intended for pressure vessel applications. Since these were the only Q&T steels listed in AWS D1.1, it was easy to impose special fabrication requirements on these two steels by placing restrictions on quenched and tempered steels. As new Q&T steels were added, these restrictions were automatically applied to the new steels, simply because they used the same steel processing method, despite the fact that some had significantly different strength and metallurgical properties. This subject is currently being considered by the AWS D1 Committee.

Because Q&T and QST steels gain their strength by controlled quenching and tempering, the welding process must be controlled to minimize softening or hardening of the

heat-affected zone, as well as to maintain adequate toughness. The degree of control necessary depends on the specific steel involved. Lower strength Q&T and QST steels (less than 70 ksi minimum specified yield strength) require no special control, but ASTM A514 does. Grades between these extremes may require some special welding provisions.

The controls required include minimum and maximum levels on the preheat and interpass temperature and on heat input. The goal is to control the cooling rate experienced by the heat-affected zone (HAZ), and yet provide sufficient preheat to avoid cracking in the weld and HAZ. Accordingly, tables have been developed that give the maximum allowable heat input for different levels of preheat and interpass temperatures. AWS D1.5 provides a table with preheat ranges, and acceptable heat input limits within those ranges, that are in turn a function of the thickness of the steel being joined. Welding within a more restrictive envelope of acceptable parameters is quite different than typical practice for most carbon steel applications, and thus can present additional challenges.

Heat shrinking (see Section 12.9 of this Guide) temperature limits are more tightly controlled for Q&T steels, and the use of high heat input welding processes like ESW and EGW (see Section 2.6 of this Guide) are similarly limited in AWS D1.1.

4.4.3 Historical (Obsolete) Steels

When welding on an existing structure, it is essential to determine the weldability of the steel. If the steel was successfully welded years ago, the weldability today should be unchanged. However, the steel in structures riveted or bolted together in the past may or may not have acceptable weldability, and this must be known before welding such steels is begun.

Ferrous metal structures made before 1900 may be made of cast iron, wrought iron, or structural steel, which began to be used in the 1880s. By 1900, steel had nearly replaced the use of cast and wrought iron as a construction material. During these early years, various producing mills used their own proprietary steel compositions, resulting in significant variations in mechanical properties and compositions. Some of these early steels, even though initially riveted, had good weldability, while others did not (Ricker, 1987).

AISC Design Guide 15, *Rehabilitation and Retrofit Guide* (Brockenbrough, 2002), contains helpful information regarding historic steel specifications, shape properties, and changes that have been made to various construction specifications over the years. Contained in that document is Table 1.1a wherein a historical summary of steel specifications are listed, along with the requirements for yield and tensile strength (which varied over time). Not listed, however, are the compositional limits, which are needed when considering weldability. That Design Guide does assist, however, in providing an understanding of what specifications were in effect at various times.

It is helpful and highly desirable to obtain a representative chemistry from steels of unknown or questionable weldability. If the composition meets the limits of a current steel grade with good weldability, it will likely have welding characteristics similar to the modern steel. Steels enriched in carbon and hardening alloys will typically require more preheat to be successfully welded. Higher levels of sulfur or phosphorous will signify an increased sensitivity to hot cracking.

Even though a representative chemistry from the steel is desirable, it is still only an indirect indication of the weldability of the steel. Accordingly, it is advisable to run simple tests on the existing member to ensure that it is weldable. For example, a single-sided fillet weld can be used to join the end of a long, flat bar to an existing member. After the weld has cooled, an attempt is made to break the flat bar from the existing member by applying force that puts the weld face into tension. When the steel has poor weldability, the weld will easily break away, cracking in the heat-affected zone, an indication of poor weldability.

If it does not break, the bar is pried in the opposite direction, putting the weld root into tension. The weld will naturally break, and typically does so in the throat. Fracture in this manner indicates better weldability.

Key historic steel specifications are reviewed below, with a focus on welding-related issues.

ASTM A7 Structural Steel for Bridges

Issued initially in 1900, the ASTM A7 specification was discontinued in 1967. It covered rivet steel, soft steel, and medium steel. For the structural steels (soft and medium), the specified yield and tensile strengths varied over the years, but in general, they had yield strengths of around 30 to 35 ksi, and tensile strengths of 50 to 70 ksi (specific values can be found in Design Guide 15). The steel was permitted to be made by the open hearth process. Limits were placed on the phosphorous content only, allowing up to 0.06 percent.

In 1939, ASTM A7 and A9 (discussed below) were consolidated into one specification, ASTM A7, covering Structural Steel for Bridges and Buildings. Also during this timeframe, A141 was issued, covering rivet steel, which was no longer included in ASTM A7.

The weldability of A7 must be evaluated on a case-by-case basis. The ASTM A7 specification was in effect for 67 years, and mill practices varied over the years. However, in 1957, the 11th edition of *The Procedure Handbook of Arc Welding* stated: "Although specifications are not intended to control carbon content, experiences with the material, as it has been delivered, indicate that the carbon content is within the readily weldable range." Thus, while not certain, by the late 1950s, the general experience with the material being delivered by that time was that the weldability was good.

ASTM A9 Structural Steel for Buildings

Issued initially in 1900, the ASTM A9 specification was absorbed into the ASTM A7 specification in 1939 and ceased to exist. Initially, it covered rivet steel and medium-strength steel with a minimum yield strength of 35 ksi, and tensile strength of 60 to 70 ksi. In 1901, this was revised, requiring the yield strength to be at least half of the tensile strength. These property requirements were modified slightly over the years (specific values can be found in Design Guide 15). The steel was permitted to be made by either the open hearth or Bessemer process. Limits were placed on the phosphorous content only, allowing up to 0.10 percent for Bessemer steel and 0.06 percent for open hearth steel.

The weldability of ASTM A9 must be evaluated on a case-by-case basis. Unlike ASTM A7, which was produced both before and after World War II (when the popularity of welding greatly increased), the A9 specification was in effect only for the period before the war.

ASTM A373 Specification for Structural Steel for Welding

Issued initially in 1958, ASTM A373 was the direct predecessor to ASTM A36, which was issued in 1962. ASTM A373 was discontinued in 1965. It contained controls on composition, including maximum limits of 0.28 percent carbon, 0.05 percent sulfur, and 0.04 percent phosphorous (Garlich, 2000). This control of carbon gave the steel good weldability. The steel has a minimum specified yield strength of 32 ksi and a tensile strength of 58 to 75 ksi. The weldability of ASTM A373 is generally considered to be good (Ricker, 1987).

ASTM A242 Specification for High-Strength, Low-Alloy Structural Steel

Issued initially in 1963, ASTM A242 was the first weathering steel. From a welding point of view, the challenge with ASTM A242 was the lack of a maximum limit on the phosphorous content. For many years, ASTM A242 was included in the AWS D1.1 Code as a prequalified steel, but with a footnote suggesting that special precautions may be necessary when welding the steel. The weldability of A242 should be investigated with special attention to the phosphorous content. A242 is no longer listed as a prequalified steel in AWS D1.1.

4.5 WELDING NONSTRUCTURAL STEELS

4.5.1 Anchor Rods

For a variety of reasons, it may be desirable to weld on anchor rods (see Section 12.1 of this Guide). The weldability of such rods must be determined first. A variety of materials can be and have been used for anchor rods, although the preferred specification today is ASTM F1554. The discussion of the welding characteristics of the following materials does not imply that these are suitable specifications for anchor rod applications.

AWS D1.1 does not contain requirements for welding on bars, bolts, nuts, and rods. Job-specific specifications must be developed when such welding is to be performed.

These guidelines are necessarily conservative and while caution is recommended, anchor rod has been successfully welded when proper procedures are developed and followed.

ASTM A307 Specification for Carbon Steel Bolts and Studs

ASTM A307 is available in three grades: A, B, and C. These rods may be ordered with the supplementary requirement S1, Bolts Suitable for Welding. When this is done, compositional limits are imposed on carbon, manganese, phosphorus, sulfur, and silicon. Additionally, a maximum carbon equivalent (CE) of 0.55 percent must be achieved. Unless this supplement has been invoked, weldability is uncertain and must be investigated. Grade A can have high sulfur contents, which may make welding difficult. While Grade C is described as "conforming to Specification (ASTM) A36," it is uncertain as to whether this is a reference to only the mechanical properties of ASTM A36 or to the compositional limits as well. There appear to be differences in the practices of various suppliers in this regard, and therefore, investigating the actual composition is recommended.

ASTM A325 Structural Bolts, Steel, Heat Treated, 120/105 ksi Minimum Tensile Strength

ASTM A325 is a specification covering two types of quenched and tempered bolts, but the same specification has been used for anchor rods. Type 1 bolts are medium carbon bolts, while Type 3 are for weathering steel applications. Type 1 bolts may have up to 0.52 percent carbon. Type 3 bolts may be supplied to one of six compositions (A through F), with A and B being particularly problematic for welding. Given the strength level involved, the method of heat treatment, and the questionable compositions, welding on such anchor rods is not recommended.

ASTM A354 Quenched and Tempered Alloy Steel Bolts, Studs, and Other Externally Threaded Fasteners

ASTM A354 is available in two strength grades: BC and BD. Both are quenched and tempered, with BC having a strength of 115 to 125 ksi, and BD having 140 to 150 ksi. Carbon contents may be as high as 0.53 percent. Given all these factors, welding on A354 is not recommended.

ASTM A449 Quenched and Tempered Steel Bolts and Studs

ASTM A449 covers two types of bolts: Type 1 and Type 2. Type 1 includes medium carbon bolts, and Type 2 includes low-carbon martensite, or medium-carbon martensite bolts. Depending on the diameter, the tensile strength ranges from a minimum of 90 to 120 ksi. The carbon content may be up to 0.55 percent for Type 1 and 0.38 percent for Type 2. Given all these factors, welding on ASTM A449 is not recommended.

ASTM A675 Steel Bars, Carbon, Hot-Wrought, Special Quality, Mechanical Properties

ASTM A675 is a general specification, covering bars in nine strength grades ranging from 45 to 90 ksi minimum specified tensile strength. The only compositional controls on the material are maximum limits on phosphorous (0.040 percent) and sulfur (0.050 percent). The weldability of the material must be investigated. If the composition is within reasonable limits, this material may be weldable.

ASTM F1554 Anchor Bolts, Steel, 36, 55, and 105 ksi Yield Strength

ASTM F1554 is currently the recommended specification to cover anchor rods. As the title indicates, three grades are covered, reflecting the minimum specified yield strengths, and corresponding to tensile strengths as 58 to 80 ksi, 75 to 95 ksi and 125 to 150 ksi, respectively.

ASTM F1554 Grade 36 anchor rod is governed by Table 1, which specifies a chemistry very much like ASTM A36. A footnote to the table indicates that for rod diameters of up to ¾ in., the manganese content is "optional with the manufacturer, but shall be compatible with weldable steel." The specification also permits the substitution of weldable Grade 55 (discussed below) when Grade 36 is specified, at the supplier's option.

There is ample evidence in the ASTM F1554 specification to suggest that Grade 36 should be easily weldable, yet confusion seems to exist among suppliers. Thus, unless the supplier of the anchor rod can provide assurance that the compositional limits of ASTM A36 have been achieved, weldability of F1554 Grade 36 should be investigated.

ASTM F1554 Grade 55 and Grade 105 both have compositions controlled by Table 2, which only controls the maximum limits of phosphorus (0.040 percent) and sulfur (0.050 percent). However, Grade 55 can be supplied with an optional supplementary requirement S1 when it is intended to be welded. This imposes a maximum limit on the carbon, manganese, phosphorus, sulfur, and silicon content. Additionally, two carbon equivalency limits are provided, one for "alloy or low-alloy steel" and another for "carbon steel."

The unfortunate reality, however, is that welding is rarely anticipated at the time when the anchor rod material is ordered, and it is unlikely that the supplementary requirement will routinely be specified.

The weldability of ASTM F1554 Grade 36 and Grade 55 should be investigated before any welding is done. F1554 Grade 55 ordered with supplementary requirement S1 should be readily weldable. Given the strength level of F1554 Grade 105, and the fact that no option is provided for supplementary requirements for improved weldability of this grade, it is not recommended for welding.

4.5.2 Bolts and Nuts

Occasionally, it becomes desirable to weld bolts to structural steel, or bolts to nuts (primarily when full engagement of the nut is not possible, or when locking nuts cannot be installed). As a general principle, welding should not be done on bolts or nuts. However, if essential, the composition of the bolt (and nuts, if involved) must be carefully considered.

Bolts are typically supplied to one of the following specifications: ASTM A307, A325, or A490. ASTM A307 and A325 were discussed above in the context of anchor rods, and the information applies, whether the material is supplied as an anchor rod or as a bolt. ASTM A490 bolts should never be welded upon, given their very high strength (150 ksi minimum). Welding on nuts and washers is also problematic.

4.5.3 Stainless Steel to Steel

The term "stainless steel" describes a whole array of materials, commonly grouped together because of their ability to resist corrosion. However, many types of stainless steel exist, including ferritic, austenitic, and martensitic grades, as well as others. The stainless steels mostly likely to be encountered are of the austenitic type, and these are easily welded both to themselves and to carbon steel, with the proper procedures. AWS D1.6 *Structural Welding Code—Stainless Steel* (AWS, 1999) provides requirements for welding stainless steel to stainless steel, as well as stainless steel to carbon steel.

4.5.4 Cast Iron

Cast iron was a popular building material prior to 1900 and because of its inherent ability to be cast into appealing shapes, rehabilitation projects often involve retaining cast iron structural elements. During such projects, it may be desirable to repair broken cast iron parts or to weld cast iron members to structural steel. While cast iron can be welded, it is difficult to weld, and the results are inconsistent. Cast iron should not be welded if the weld is intended to serve a structural function. Of course, cast iron members were nearly always used to resist compression, and cosmetic cracks or portions that have broken off may be repaired by welding using the proper procedures and materials. A variety of welding aids are available to assist in developing procedures for repairing cast iron components.

There are many grades of cast iron with very different properties and weldability. If welding is to be done on cast iron, the specific properties of the casting should be determined, and appropriate welding procedures developed, with a special focus on preheat and filler metal selection.

Cast iron columns can sometimes be retained for architectural purposes by inserting a new steel member inside the column, using the replacement steel to resist all the structural loads. This may satisfy the architect's objectives while providing a reliable structural system composed of modern material.

4.5.5 Wrought Iron

Wrought iron was an important building material prior to 1900 and was used for members subject to tensile loading, where cast iron was inappropriate. Wrought iron is composed of nearly pure iron and iron silicate (slag). It offers greater corrosion resistance than steel. Wrought iron is typically weldable, but the wrought iron itself often tears in a manner somewhat similar to lamellar tearing (see Section 5.4 of this Guide). Caution should be exercised when relying on such welds to support significant loads.

4.5.6 Steel Castings

As structural steel is becoming more frequently featured as an architectural element in buildings, steel castings are becoming more popular. Not to be confused with cast iron castings, steel castings may have compositions similar to those of structural steel grades. When this is the case, the weldability of the cast steel is essentially identical to that of the rolled steel shape or plate of the same grade. The grains in steel castings may be more directional (i.e., less anisotropic), and the grain sizes of the steel will likely be larger; such differences may slightly increase the complexity of welding.

Steel castings do not necessarily have the same compositions as rolled structural steel of the same nominal strength level. In order to get the required strengths in the as-cast condition, the foundry can easily increase the carbon content, and in the process make the material more difficult to weld. Thus, early in a project, the compositional limits of the material to be used in the steel castings should be examined in light of weldability.

5. Weld Cracking

5.1 INTRODUCTION

Some weld discontinuities, such as porosity, have acceptable limits. In the case of cracking, however, AWS D1.1 permits none. Fortunately, cracking rarely occurs when fabrication is done in accordance with today's specifications because they require careful control of the factors that might otherwise lead to cracking. When cracking does occur, it is typically the result of one or more variables being significantly outside the expected range of acceptability.

For the purposes of this section, "weld cracking" will be distinguished from "weld failure." While the physical appearance of the two may be similar, the term "weld cracking" will be used to describe cracking that occurs during or near the time that welding is performed. Welds may fail (crack) due to overload or fatigue, for example, but cracking as discussed in this chapter is due to solidification, cooling, and shrinkage, not loads in the service-life of the structure.

Weld cracks can be divided into two broad categories: hot cracks and cold cracks. Hot cracks occur only when the weld is hot, and such cracks are solidification related. Hot cracking may also be called solidification or liquation cracking. Cold cracks, in contrast, only occur when the weld is cool and are hydrogen related. Totally different mechanisms cause hot and cold cracks, and correspondingly, different solutions must be employed to overcome these problems.

In a welded connection, three distinct zones exist: the weld metal itself, the heat-affected zone (HAZ), and the base metal. Cracking may occur in any of these three regions, with cracking in the weld or HAZ being more predominant (although cracks initiating in these regions may run into the base metal). Cracks in both the weld and the HAZ will be considered weld cracks for purposes of this chapter. Additionally, lamellar tearing, a type of cracking problem that occurs in base metal but is related to welding, is covered in this chapter.

5.2 SHRINKAGE AND RESTRAINT

The various forms of weld cracks are all driven by at least two common factors: the shrinkage of the weld and surrounding base metal that were heated and expanded by welding, and the restraint to such shrinkage that is offered by the base metal as the hot materials contract. Conceptually at least, if metal did not expand during heating or shrink during cooling, welds would not crack. Furthermore, if no restraint or resistance to such expansion and contraction existed, no cracking would occur. However, volumetric changes with temperature are a physical reality, as are constraints to such volumetric changes. Additionally, other factors may further aggravate cracking tendencies. Given that all arc welding involves thermal expansion and contraction, along with constraint, focusing on these items before getting into the specific details of the various cracking mechanisms is in order.

5.2.1 Shrinkage

To understand the magnitude of the shrinkage strains that are involved, consider a steel bar with dimensions of 1 in. × 1 in. × 10 in. If the bar is made of steel with 50 ksi yield strength, it will elastically elongate a total of 0.016 in. if mechanically loaded up to the yield stress. Next, consider the magnitude of expansion created by increases in temperature. If the same bar (unloaded) is heated from a room temperature of 70 to 300 °F, it will expand the same 0.016 in. Thus, when a localized portion of a 50 ksi steel is heated to above 300 °F under rigidly restrained conditions, some thermal upsetting (e.g., yielding) will occur.

Understanding the shrinkage of steel castings can be helpful in gaining an understanding of weld shrinkage. The old steel casting pattern maker's rule-of-thumb was to make the patterns 3⁄16 in. larger per foot to account for the melting temperature to room temperature linear contraction. Applying this estimation value to the 10 in. bar, the contraction would be 0.16 in., or 10 times the yield point strain. If the bar is free to shrink, it simply shortens by 0.16 in. However, if the hot metal is surrounded by and restrained by colder steel that is not expanded, the expanded metal must yield as it cools and shrinks, until such time as the shrinkage stress is the same as the yield strength of the material. At that point, yield-point residual stresses will exist.

5.2.2 Constraint

If there were no resistance to shrinkage, then again, at least in a theoretical sense, there would be no cracking, but this is obviously not the case either. During welding, significant thermal gradients exist within a material, typically ranging from the melting temperature of steel, down to room temperature. As the hot, expanded weld metal and surrounding hot base metal begin to cool, and correspondingly volumetrically contract, the colder surrounding steel resists this contraction. The degree of resistance offered depends on the volume and strength of the colder material, as well as the stiffness of the configuration of the material. Also, since the strength and modulus of elasticity change with temperature, the temperature of the surrounding steel is another factor.

It is not possible to simply quantify mathematically the degree of restraint offered by the surrounding steel, but an intuitive "feel" can be developed. Consider for example, a butt splice joining two 3 in. × 10 in. × 20 ft flat plates into a single 40-ft-long member. While thick (3 in.), the required weld is not particularly long (10 in.), and while the required weld will shrink, there will be little resistance to this shrinkage. Hence, cracking concerns would be minimal in this particular situation.

Next, consider a splice to join two 20-ft lengths of a W14×730, with 5-in.-thick flanges, a web that is 3 1/16 in. thick, and a *T*-dimension of 10 in. Furthermore, assume that the flange butt splices have already been made, and the only remaining weld is the web splice. Even though the weld required on the web for this splice is essentially identical to the above example, the restraint is significantly different, greatly increasing cracking concerns. The "feel" for the difference should be obvious.

Experience has shown that as base metal thicknesses become greater than 1½ in., as steel strength levels increase beyond 50 ksi, and when members intersect from all three geometric directions, high restraint will be experienced at the intersections of the materials. Under such conditions, special precautions may be required with respect to weld detailing, preheating, weld sequencing, welding procedures, filler metal selection, interpass temperature, and post-welding thermal operations. The use of residual stress-reduction measures such as peening or in-process stress relief may be necessary under extreme conditions. Details of these techniques are discussed in Sections 5.5, 5.6, and 5.7 of this chapter.

5.3 TYPES OF WELD CRACKS

Weld cracking may be categorized based upon the crack orientation and location of occurrence, in one of the following ways: centerline cracking, heat-affected zone (HAZ) cracking, and transverse cracking. Additionally, there is the welding-related phenomenon of lamellar tearing. Each of these is discussed individually in the following sections.

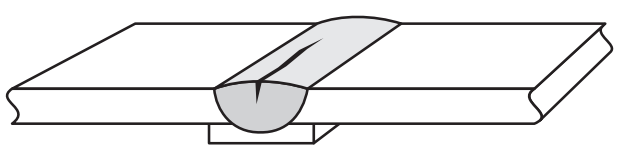

Figure 5–1. Centerline cracking.

5.3.1 Centerline Cracking

Centerline cracking is a separation in the center of a given weld bead. If the weld bead happens to be in the center of the joint, as is always the case on a single-pass weld, centerline cracks will generally be in the center of the joint. In the case of multiple-pass welds where several beads per layer may be applied, a centerline crack may not be in the geometric center of the joint, although it will always be in the center of a weld bead (see Figure 5–1).

Centerline cracking results from one of the following three phenomena: segregation-induced cracking, bead-shape-induced cracking, or surface-profile-induced cracking. Unfortunately, all three phenomena result in the same type of crack, and it is often difficult to identify the precise cause. Experience has shown that often two or even all three of the phenomena will interact and contribute to the cracking problem. Understanding the fundamental mechanism of each of these types of centerline cracks will help in determining the corrective solutions.

Regardless of cause, centerline cracks are hot cracks that are solidification related. The volumetric contraction that occurs as the metal transforms from a hot liquid to a hot solid creates the driving force for this type of cracking. When castings are made the same phenomenon can lead to separations called "hot tears," which also occurred in the cast ingots used in integrated-mill steelmaking practices.

Centerline cracks will either be present after solidification has taken place, or they will not occur. While other types of cracking may occur as the weld metal and surrounding steel cool (e.g., cold cracks), there is no continued risk of solidification cracking after the weld cools to room temperature.

Centerline cracks typically, but not always, extend to the surface (face) of the weld. In a multipass weld, it is possible to weld over a previous weld bead that contained a surface-breaking centerline crack, burying the crack internally. This possibility emphasizes the importance of good, in-process inspection of previously deposited weld beads.

In some situations, centerline cracks can be internal to the individual weld bead, and not be surface-breaking, although this is the exception. Such anomalous behavior is typically associated with improper width-to-depth ratios, discussed below.

Segregation-Induced Cracking

Segregation-induced cracking occurs when low-melting-point constituents in the admixture separate during the weld solidification process. As the weld metal solidifies, elements and compounds with low melting temperatures are forced into the liquid phases that are next to the solidifying metal. The enrichment of the remaining liquid material (typically concentrated in the center of the weld cross section, or between solidifying grains of metal within the weld) with the low-melting-point materials, can lead to cracking.

When intermixed materials have a significantly different melting point than the basic iron-carbon weld metal, it is possible to have a liquid mixture in the center of the joint after the majority of the weld has solidified. This is illustrated in Figure 5–2. In Figure 5–2a, the weld nugget is entirely molten. In Figure 5–2b, solidification has begun. When materials solidify, segregation may occur. The result is a change in composition throughout the cross section of the solidified material. The grains of steel have begun to grow, generally perpendicular to the fusion interface. As this solidification proceeds, segregation occurs. In an iron-carbon system, the first materials to solidify are typically lower in carbon content because pure iron has a higher freezing point than iron-carbon mixtures.

The degree of segregation is a complex issue and is a function of the solubility of the element or compound in liquid iron, as well as the rate at which solidification takes place. In general, however, the low-carbon layer that begins to form first results in higher levels of carbon being pushed into the still-liquid center of the weld bead. Other low-melting-point constituents can also be forced into this liquid center. Part of the cross section is solidified, while a portion remains liquid. In Figure 5–2c, solidification has progressed further, and as shown in Figure 5–2d, solidification is nearly complete. Notice that the last portion of the bead to solidify is in the center of the cross section. This is the location that will contain any remaining components that have the lower freezing point.

In the case of some low-melting-point ingredients, the segregation takes place on a more localized basis, where individual elements segregate as individual grains form, expelling the still-liquid ingredients to the grain boundaries.

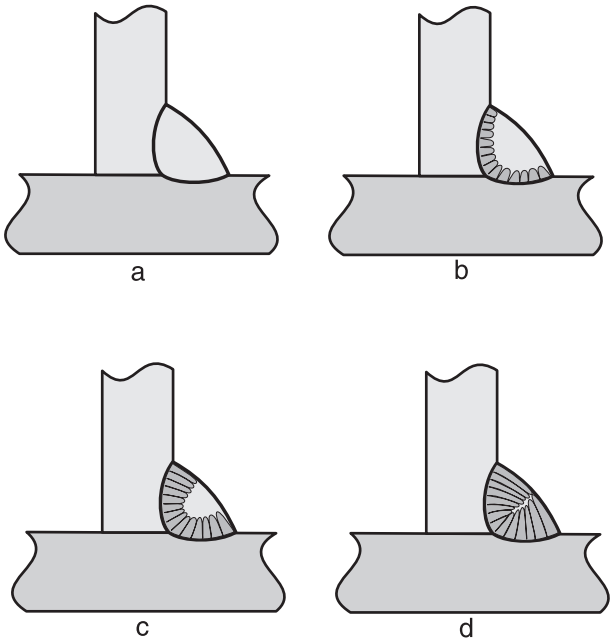

Figure 5–2. Grain growth and centerline cracking.

If the steels contain higher-than-desirable levels of sulfur, phosphorus, lead, or copper, these elements tend to segregate into the center of the solidifying weld bead. Perhaps the most frequently encountered contaminant from steel is sulfur. In the presence of iron, the sulfur will combine to form iron sulfide (FeS). Iron sulfide has a melting point of approximately 2,200 °F. Steel, on the other hand, has a melting point of approximately 2,800 °F. As the grains grow, iron sulfides are forced into the center of the joint. Well after all of this steel has solidified, the liquid iron sulfides with a melting point 600 °F less than that of the steel will be contained in the center of the weld bead. As the steel cools, it contracts, pulling on the center of the weld bead, which contains the weak liquid iron sulfide. As shown in Figure 5–2d, the weld bead will crack.

Phosphorus, lead, and copper will act in a similar manner. The primary difference with these elements is that they do not form compounds but are present in their basic form. The commercial welding processes are all capable of tolerating low levels of these contaminants. However, when higher levels are experienced, the segregation occurs and may result in centerline cracking. Whereas these elements may come from the filler material, they are more commonly the result of base material compositions or surface contaminations; therefore, they must be controlled in the base materials.

When centerline cracking induced by segregation is experienced, several solutions may be implemented. Since the contaminant usually comes from the base material, the first consideration is to limit the amount of contaminant pickup from the base material. The most straightforward solution is to use materials that are free of such contaminants. The steels listed in the AISC Specification and AWS D1.1 have controls on steel ingredients that can cause such problems. That does not mean that such steels will never have problems, however. Steels with compositions within the specification,

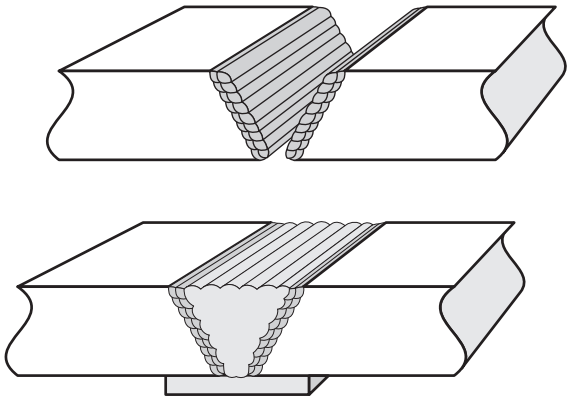

Figure 5–3. Buttering.

but nevertheless high in such low-melting-point ingredients, can be problematic. Furthermore, the possibility of an improperly identified material exists.

When welding on steels enriched with low-melting-point ingredients is required, it is desirable to limit the penetration of the welding process. In some cases, a joint redesign may be advantageous. The extra penetration afforded by some of the processes may not be necessary, and if this is the case, the extra penetration can be reduced. This can be accomplished by using lower welding currents, or changes in polarity.

A buttering layer of weld material (see Figure 5–3), deposited by a low-energy process, such as shielded metal arc welding, may effectively reduce the amount of pickup of contaminant into the weld admixture.

In the case of sulfur, it is possible to overcome the harmful effects of iron sulfides by preferentially forming a mixed iron-manganese sulfide. This sulfide (MnFeS) forms when sufficient levels of manganese are present to create this compound rather than iron sulfide. Manganese sulfide has a melting point of 2,900 °F. In this situation, before the weld metal begins to solidify, manganese sulfides are formed and do not segregate. Steel producers utilize this concept when higher levels of sulfur are encountered in the iron ore or the steel scrap. In welding, it is possible to use filler materials with higher levels of manganese to overcome the formation of low-melting-point iron sulfide. Unfortunately, this concept cannot be applied to contaminants other than sulfur.

The amount of manganese required to avoid cracking depends on the level of sulfur in the weld deposit, as well as the carbon content. A Mn:S ratio exceeding 20:1 is always desirable, and when the carbon content exceeds 0.12 percent, the Mn:S ratio should be increased such that:

$$Mn/S \geq 850\ (\%\ C) - 83 \quad \text{(adapted from ASM, 1997)}$$

This is based on the composition of the weld deposit, which is composed of both base metal and filler metal. Estimates of the weld metal analysis can be made based on estimates of the amount of admixture that will be experienced. To increase the Mn:S ratio, Mn can be increased, and S can be decreased. Typically, this is done through the use of lower S base metals, minimizing base metal admixture levels, and using filler metals with higher Mn levels.

Segregation takes time to occur, and slower weld cooling rates encourage this behavior. Thus, the risk of cracking due to segregation is increased with high heat-input levels (which often result from high amperage levels, which correspondingly increase admixture levels) and high preheat levels. This may seem counterintuitive, since slow cooling rates help reduce cold cracking tendencies. In the case of hot cracking behavior, these techniques hurt rather than help.

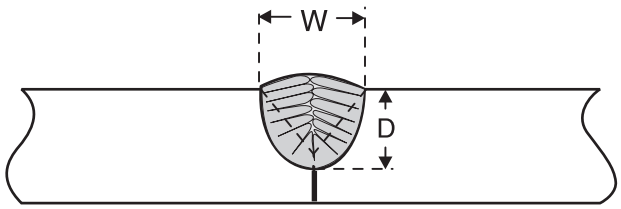

Figure 5–4. Width-to-depth ratio.

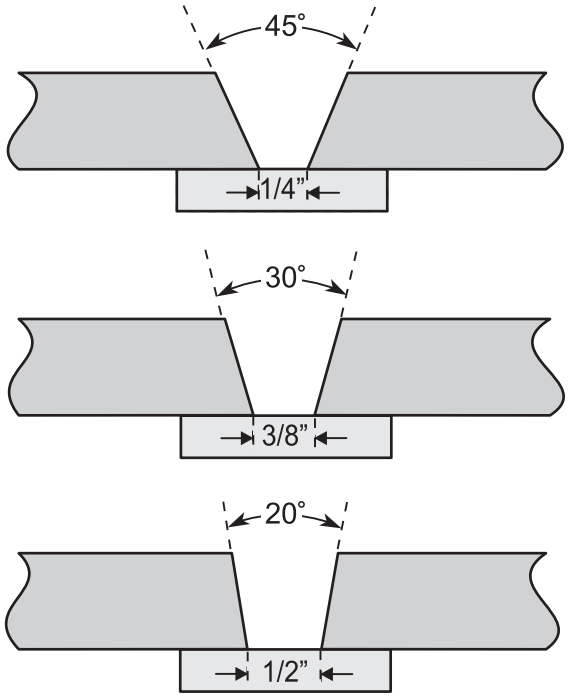

Figure 5–5. Groove weld details and root conditions.

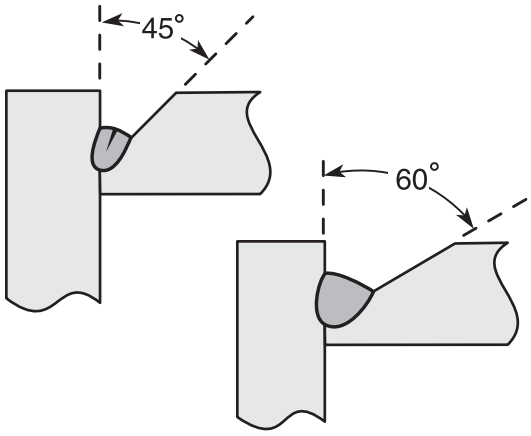

Figure 5–6. Effect of included angle on cracking.

Bead-Shape-Induced Cracking

The second type of centerline cracking is known as bead-shape-induced cracking. This is illustrated in Figure 5–4 and is most often associated with deep-penetrating processes such as SAW and gas-shielded FCAW. When the cross-section of a single weld bead is of a shape where there is more depth than width, the solidifying grains grow generally perpendicular to the steel and intersect in the middle, but do not gain fusion across the joint. To correct for this condition, the individual weld beads must have at least as much width as depth. Recommendations vary from a 1:1 to a 1.4:1 width-to-depth ratio to remedy this condition. The final overall weld configuration, which may have many individual weld beads, can have a profile that constitutes more depth than width. If multiple passes are used in this situation, and each bead is wider than it is deep, a crack-free weld can be made.

Some authors refer to this type of cracking in terms of depth-to-width ratio, versus width-to-depth ratio, as has been done here. When this is done, the preferred ratios are less than 1.0. Obviously, one ratio is simply the inverse of the other, and either approach is acceptable. This detail has, unfortunately, caused some needless confusion when seemingly conflicting information for recommended practice has been offered; a width-to-depth ratio recommendation of 1.25 is of course the same as a recommendation of 0.8 for a depth-to-width ratio.

Joint design affects the tendency toward centerline cracking induced by bead shape. The prequalified joint details in AWS D1.1 have taken this into account. Consider, for example, the three joints listed in Figure 5–5. Known as a B-U2a, the combination of root opening and included angle is adjusted to encourage the formation of a root pass with an acceptable width-to-depth ratio. As the included angle is decreased, the tendency toward a narrow, deep bead increases. To compensate for this, a larger root opening is used. For PJP groove welds, the preferred configuration for a single-bevel joint is to have a minimum of a 60° included angle when the submerged arc welding process is used. With the deep penetration afforded by this process, a 45° included angle could lead to unacceptable centerline cracking (see Figure 5–6). Other processes may use smaller included angles, because they lack the penetration capacity that would create this unacceptable relationship. However, these processes rarely obtain fusion down to the root under such tight joint configurations.

Centerline cracking due to bead shape may occur in either groove welds or fillet welds. It is rarely experienced in fillet welds when applied to 90° T-joints. However, when skewed joints are specified, and the acute angle side is less than 70°, centerline cracking may occur, particularly when the weld process has significant penetrating capability.

When centerline cracking due to bead shape is experienced, the first consideration should be to change the weld joint details, which typically requires an increase in the included angle and/or root opening. Since the weld bead depth is a function of penetration, it may be necessary to reduce the amount of penetration. This can be accomplished by utilizing lower welding amperages and larger diameter electrodes, both of which will reduce the current density and limit the amount of penetration.

Surface-Profile-Induced Cracking

A third mechanism that generates centerline cracks is the surface profile condition. When the surface of an individual weld bead is concave, internal shrinkage stresses will place the weld metal on the surface into tension. Conversely, when convex weld surfaces are created, the internal shrinkage forces pull the surface into compression. These situations are illustrated in Figure 5–7.

In addition to being crack sensitive, extremely concave fillet welds may have acceptable leg dimensions, but lack the required throat dimension (see Figure 5–8).

Concave weld surfaces frequently are the result of high arc voltages. A slight decrease in arc voltage will cause the weld bead to return to a slightly convex profile and eliminate

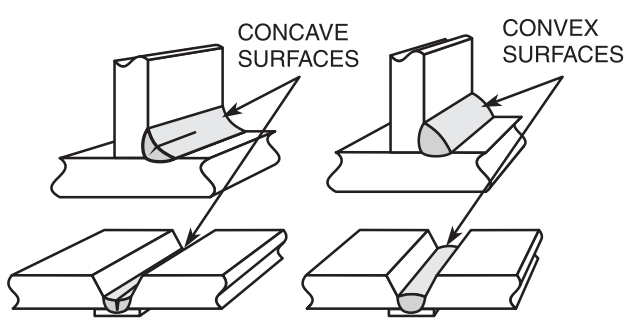

Figure 5–7. Surface profile and cracking.

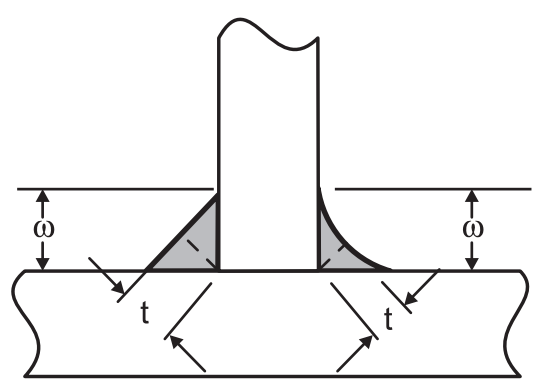

Figure 5–8. Weld throats and surface profile.

the cracking tendency. Vertical-down welding also has the tendency to generate these crack-sensitive, concave surfaces. Vertical-up welding can remedy this situation by providing a more convex bead. For gas-shielded processes, such as GMAW and FCAW-G, a change in shielding gas can change the surface profile.

Weld Pool Length Cracking

There is a fourth cause of centerline cracking that is caused when the weld pool (puddle) becomes long and tear-drop shaped. Typically, this is associated with higher welding travel speeds that are not commonly used for structural steel applications. Thus, this topic will not be addressed in this Guide.

5.3.2 Heat-Affected Zone Cracking

Heat-affected zone (HAZ) cracking is characterized by separation that occurs in the region immediately adjacent to the weld bead (Figure 5–9). The cracking occurs in the base material, and although it is certainly related to the welding process, the crack does not occur in the weld material. This type of cracking is also known as "underbead cracking," "toe cracking," or "delayed cracking."

Heat-affected zone cracking is one form of cold cracking; it cannot occur when the steel is hot. For structural steels, it is unlikely to occur if the temperature is above 300 °F (Bailey, 1994).

Heat-affected zone cracking occurs due to three factors, each of sufficient magnitude to cause this phenomenon, as follows:

- A sufficient level of hydrogen.
- A susceptible HAZ microstructure.
- Applied or residual stresses.

Some authors will add one or two additional factors, including the aforementioned temperature (e.g., a low temperature must be reached) and time (e.g., a sufficient length of time after the steel cools must transpire in order for this type of cracking to occur). These two factors are inevitable (i.e., the steel must cool, and time will elapse) and are thus not included here as primary factors. As will be discussed below, there are ways that time and temperature can be manipulated to reduce cracking tendencies.

The fact that HAZ cracking is delayed, however, warrants some discussion. First, the time element gives rise to the description of "delayed cracking." The reason for the delay is that it takes time for the diffusible hydrogen to move in the steel to form concentrations that will cause cracking. This is sometimes called an incubation period, and estimates for the required time range from 16 to 72 hours (Bailey, 1994). Some authors suggest that, if present in excessive quantities, hydrogen can cause cracking as soon as the steel cools to room temperature. The more common and the more problematic situation is when there is some delay.

The natural implication of the delayed nature of the cracking is that weldments can be inspected and accepted before cracking has occurred. For this reason, AWS D1.1 requires a delay of 48 hours after completing the welds before NDT is preformed on quenched and tempered ASTM A514 and A517, 100 ksi yield strength steels, which are particularly sensitive to hydrogen cracking.

Many theories explaining the mechanics of hydrogen cracking have been proffered over the years, and no single theory appears to adequately explain all observed hydrogen-related phenomenon (Gibala and Hehemann, 1984). Current thinking is that hydrogen interferes with the movement of dislocations, imperfections in the atomic lattice that permit inelastic deformations (Bailey, 1994). The lack of a definitive explanation, however, has not precluded the development of good practices that mitigate the occurrence of cracking.

A Sufficient Level of Hydrogen

Hydrogen cracking cannot occur without a sufficient level of hydrogen. Hydrogen can be introduced into the weld pool from the arc. The arc does not create hydrogen, but rather breaks down hydrogen-bearing compounds introduced into the arc region. Water and oils are the chief sources of such compounds. Water may be introduced through shielding fluxes, whether they are coatings on the outside of SMAW electrodes or granular fluxes used for SAW. Water may be present on the steel in the form of condensation (including condensation of the combustion byproducts from preheating torches) or moistened scale and rust. Humid atmospheres are also sources of hydrogen. Oils, grease, paint, and other materials generally considered contaminants on the steel surface can introduce hydrogen-bearing compounds. Excessive lubricants on the filler metal, whether residual from the

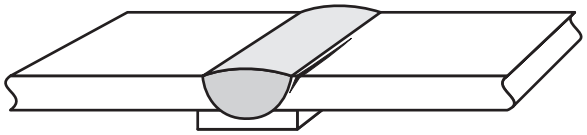

Figure 5–9. Heat-affected zone cracking.

manufacturing process, or deliberately added, may add hydrogen-bearing compounds into the arc. Finally, although it is rarely the case, hydrogen can be contained within the steel itself, either in the base metal, or in the metallic components of the filler metal.

When these compounds are introduced into the arc, the compounds are broken down into their elemental forms, including the release of atomic hydrogen. This hydrogen is readily absorbed into the molten weld pool. During solidification and cooling, much of this hydrogen is released. As the steel cools further, however, the rate of release decreases, and some hydrogen will be retained in the weld when it reaches room temperature.

A Susceptible HAZ Microstructure

In order for HAZ cracking to occur, the HAZ must have a susceptible microstructure. The HAZ is the narrow region next to the weld metal, the part of the base metal that is heated by welding to a temperature lower than that required to melt the steel. While the chemistry in this region is unchanged, the mechanical properties of the material may be significantly affected, depending on the composition of the steel and the cooling rate experienced by the HAZ. A susceptible microstructure is typically hard and brittle.

To avoid the development of a susceptible microstructure, two basic approaches can be employed. The first method is to select base metals that are low in carbon and low in alloy content. The carbon content determines the maximum hardness that can be achieved by quenching, and alloys determine the material's hardenability, which is defined as that property of a ferrous alloy that determines the depth and distribution of hardness induced by quenching (Stout, 1987).

The second means used to avoid the development of a susceptible microstructure is to control the cooling rate of the HAZ. The HAZ will become hot in arc welding, but it need not automatically cool rapidly. Cooling rates are controlled by temperature differentials; the greater the difference, the faster the cooling rate, and correspondingly, the greater the possibility of the development of a sensitive HAZ. Cooling rates increase under these conditions:

- Low ambient temperatures.
- Low steel temperature (i.e., low preheat temperature).
- Low interpass temperature.
- Thicker steel sections.
- Lower welding heat input.

When a steel with enough carbon and alloy is cooled rapidly, a susceptible microstructure can be formed.

Applied or Residual Stress

The final component required for HAZ cracking is stress, either applied or residual. As was discussed in Section 5.2.1, in as-welded assemblies, yield-point residual tensile stresses are always present. While residual stresses immediately after welding cannot be eliminated, they can be reduced. These measures are discussed in Sections 5.6, 5.7 and 5.8 of this chapter.

Limiting Hydrogen

To limit HAZ cracking, all three contributing factors are typically controlled. The level of retained hydrogen should be minimized. This is best accomplished by not introducing hydrogen-bearing compounds into the arc in the first place. Thus, base metal surfaces should be clean and filler metals should be dry. AWS D1.1 requires that when SMAW is used on steel with a minimum specified yield strength of 50 ksi or greater, electrodes with low-hydrogen coverings are required for prequalified WPSs. This includes ASTM A992, which is the primary material used for W-shapes today. Also, AWS D1.1 prescribes exposure limits for filler metals to ensure that excessive moisture pickup from the atmosphere does not occur.

Should excessive hydrogen be suspected, a post-heat hydrogen treatment can mitigate such concerns. Post-heat involves heating the weld area to a temperature of 400 to 450 °F and holding the assembly at that temperature an hour for each inch of weld thickness. At this temperature, the mobility of hydrogen increases so that most of the hydrogen will diffuse out of the region. It is essential, however, that the welded region not be allowed to cool to room temperature before the post-heat is applied. Recall that hydrogen cracking cannot occur until the steel becomes cool. Accordingly, if a hot, just-welded region is immediately subject to post-heat, cracking cannot occur. During the post-heat, most of the hydrogen will be released, and when the assembly cools to room temperature, cracking will not occur since one of the three requirements for this type of cracking (e.g., sufficient hydrogen) is no longer present.

Limiting Sensitive HAZs

Many measures are contained within AWS D1.1 to limit the development of susceptible microstructures, beginning with the list of steels, whether prequalified or code approved. Ambient welding conditions are controlled, and minimum preheat and interpass temperatures are specified for prequalified WPSs, as a function of the steel grade and thickness used. The minimum prequalified fillet weld size, discussed in Section 3.2.2 of this Guide, is a means of controlling the heat input.

A variety of carbon equivalency (CE) formulas have been empirically derived over the years, each developed with the

intent of quantifying the weldability of a material and prescribing the conditions (preheat, heat input level, hydrogen level, etc.) that must be maintained in order to fabricate such materials free of cracking. It is essential to remember that the formulas are empirically based, and the model is only as valid as the range of data that supports it. When a formula is applied outside the bounds of supporting experimental data, the predictions are suspect and may be incorrect.

With a known base metal composition, the carbon equivalency can be calculated. This number, by itself, is of limited value. However, the CE number can be used to determine welding conditions that are conducive to crack-free welding, such as minimum preheat temperatures and required maximum diffusible hydrogen limits.

The various equations fit into three general categories. The first category of equations, based on the percentage content of various elements present in the steel, takes on the format of the following:

$$CE = C + Mn/6 + (Cr + Mo + V)/5 + (Mo + Cu)/15$$

This formula was developed more than 60 years ago, using "traditional" steels that relied on carbon as a primary strengthening element. It yields good results for steels with carbon contents from 0.18 to 0.30 percent. While it continues to be used to this day, it does not provide good results for steels made with lower carbon contents, as is commonly the practice for structural steels today. Variations on the above equation exist, but the common element of this group of CE equations is the use of the carbon content directly and the addition of the one-sixth of the manganese content.

The second category of carbon equivalency equations take on this format:

$$P_{cm} = C + Si/30 + Mn/20 + Cu/20 + Ni/20 + Cr/20 + Mo/15 + V/10 + 5B$$

As compared to the carbon content, this formula diminishes the role of the various alloys, except for boron. This formula was developed in Japan for more modern steels with lower carbon contents (< 0.12 percent). Obviously, if the steel only contains C, Mn, Cr, V, Mo, and Cu, the CE formula will yield a lower numerical value than the P_{cm} formula. However, this is a meaningless comparison; the numerical computations are only valid for comparison with the other values calculated using the same formula. What is apparent from the P_{cm} formula is that, relative to the various alloys (except boron), carbon is more important, which explains the preference for this equation when low-carbon steels are used.

The third category includes one equation, developed with the goal of combining the above two types of equations. Unlike the other equations, this approach accounts for the nonlinear behavior that better matches empirical data. This approach, developed by Yurioka (1990) is as follows:

$$CEN = C + A(C)\{(Si/24 + Mn/6 + Cu/15 + Ni/20 + (Cr + Mo + Nb + V)/15 + 5B\}$$

where

$$A(C) = 0.75 + 0.25 \tanh\{20(C - 0.12)\}$$

This has not found widespread usage in the United States but is probably the most accurate of the systems developed to date.

It should be noted that a CE, P_{cm}, or CEN numerical value, by itself, has limited value. None will lead directly to a defined set of fabrication conditions. Limits on such values may assist in procuring materials with better weldability, and data from various steels can be compared when such data are available. These models all suggest that, all else being equal, a lower value should result in a HAZ that is more resistant to hydrogen cracking.

Limiting Stress

Cracking tendencies can be mitigated by reducing the residual stress. Techniques to control residual stress are covered in Sections 5.5, 5.6, and 5.7 of this chapter.

5.3.3 Transverse Cracking

Transverse cracking, also called cross cracking, is characterized as a crack within the weld metal, perpendicular to the direction of travel (see Figure 5–10). This type of cracking includes chevron cracking where the cracks occur at a 45° orientation to the weld surface (but the surface indication is still perpendicular to the weld axis). Transverse cracking may be the least frequently encountered type of cracking, and is generally associated with weld metal that is high in

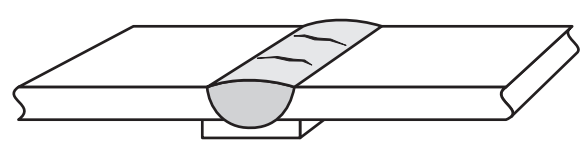

Figure 5–10. Transverse cracking.

strength, overmatching the base material. Transverse cracking is another form of cold cracking, and like HAZ cracking, is driven by the same three factors: excessive hydrogen, a susceptible microstructure, and applied or residual stress.

Hydrogen

The sources of hydrogen for this type of cracking are no different than those identified in Section 5.3.2 for HAZ cracking. A feature associated with transverse cracking is that multiple-pass welds are often involved, and the thicknesses of steel involved are typically over 2 in.. As has been mentioned, hydrogen begins to diffuse out of welds as soon as weld metal is deposited. In the case of multiple-pass welds, if the time between weld passes is short, the hydrogen that is trying to leave the previous deposit finds a new layer of metal (the next weld pass) through which it must diffuse. Accordingly, hydrogen contents can increase when individual weld passes in multiple-pass welds are rapidly deposited on top of each other. This may occur in applications like beam-flange to column-flange welds that are short in length.

Reducing the hydrogen content in the deposited weld metal is a key method to overcome this type of cracking. This can be accomplished by selecting the proper filler metals and controlling exposure of the filler metals, interpass temperature, and time between weld passes. The weld pass size is another factor. Normally, high heat-input levels are good, in that they encourage slow cooling. In this case, those benefits are offset by the greater distance through which the hydrogen must diffuse. Thus, within limits, thinner weld beads are helpful. However, extremely small weld beads are associated with low heat-input welding and, correspondingly, faster cooling rates, which may offset the benefits of smaller hydrogen diffusion paths. Extra preheat and higher interpass temperatures are also helpful.

Susceptible Material

In the case of transverse cracking, the susceptible material is the weld metal itself. For most steel applications, the hardenability of the base metal will be greater than the weld metal, as the base metal typically has higher carbon contents. Thus, the more common form of hydrogen cracking is HAZ cracking, as discussed in Section 5.3.2. This includes most steels with actual yield strengths (versus minimum specified yield strengths) of less than about 85 ksi (Bailey, 1994). When steels require low or no preheat, often driven by low CE computations, the weld metal may be the more susceptible material. Typically, when transverse cracking occurs, the actual deposited weld metal will overmatch the base metal.

Residual Stress

The residual stress is due to the longitudinal shrinkage of the weld. A long weld (greater than about a foot) is generally necessary to develop sufficient longitudinal stress to cause this type of cracking. As the weld bead shrinks longitudinally, the surrounding base material resists this force by going into longitudinal compression. The strength of the surrounding steel in compression restricts the ability of the weld material to shrink. When the weld material is high in strength, it has a reduced capacity to plastically deform. Due to the restraint of the surrounding base material, the weld metal may crack in the transverse direction.

Solutions

When transverse cracking is encountered, the strength of the actual weld metal deposit should also be reviewed. Emphasis is placed upon the actual weld metal deposit because the filler metal may deposit lower-strength, more ductile metal under normal conditions. However, with the influence of alloy pickup and welding procedures that encourage rapid cooling rates (e.g., small weld passes made with low heat-input levels), it is possible for the weld metal to exhibit higher strengths with reduced ductility. Using lower-strength weld metal is an effective solution, but caution should be taken to ensure that the required joint strength is attained.

For fillet welds and PJP groove welds, undermatching is possible and is a frequently applied solution for situations where transverse cracking is expected. The common application of this concept is the web-to-flange weld of ASTM A514 steel. The 70 ksi filler metals are routinely used to make this connection. When a higher-strength filler material that matches the base material is used, the tendencies toward cracking, including transverse cracking, increase.

Increased preheat may alleviate transverse cracking by assisting in diffusing the excessive hydrogen. When preheat is applied, it may expand the length of the weld joint, allowing the weld metal and the joint to contract simultaneously and reducing the strains applied to the shrinking weld. This is particularly important when making circumferential welds. When the circumference of the materials being welded is expanded, the weld metal is free to contract along with the surrounding base material, reducing the longitudinal shrinkage stress. Finally, post-weld hydrogen release treatments that involve holding the steel at 400 to 450 °F for extended times will assist in diffusing residual hydrogen.

5.4 LAMELLAR TEARING

Lamellar tearing is a welding-related type of cracking that can occur in the base metal. It is caused by welding shrinkage strains acting perpendicular to planes of weakness in the steel and the tearing occurs slightly outside the HAZ. These areas of weakness are the result of inclusions in the base metal that have been flattened into very thin discontinuities that are roughly parallel to the surface of the steel. When strained perpendicular to the direction of rolling,

the metallurgical bonds across these planes can separate. Since the various individual planes may not all be on the same overall plane, the resulting fracture may jump between the individual planes, resulting in a "stair-stepped" pattern of fractures illustrated in Figure 5–11.

Unlike hydrogen cracking, which is typically delayed, lamellar tearing usually occurs immediately while the weld is cooling and shrinking. Furthermore, hydrogen cracking is "cold cracking," while lamellar tearing may start at temperatures over 500 °F, higher than where hydrogen cracking can occur (Bailey, 1994). In other cases, however, lamellar tearing may occur well after the weld has solidified and cooled due to additional shrinkage stresses that are the result of welding on another part of the assembly.

Lamellar tearing may or may not extend to the surface of the steel. For non-surface-breaking tearing, ultrasonic inspection is a good process for detection.

Lamellar tearing tendencies are most closely related to the form of the inclusions (i.e., their shape), the number, and the distribution. The type (composition) is less important, although the composition will directly affect the inclusion form (Bailey, 1994). Manganese sulfides (MnS) are more deformable than sulfides formed with calcium, affecting their shape. The degree of rolling will affect inclusion shape; increased rolling flattens the inclusions more, making the steel more susceptible.

The term "lamellar tearing" is an accurate description since, on a local basis, the cracking is ductile. A two-stage process is involved: first, the nonmetallic inclusions detach from the surrounding steel matrix. Once separated, the ligaments between the inclusions crack or tear in a ductile manner.

Several approaches can be taken to overcome lamellar tearing. The first variable is the steel itself. Lower levels of

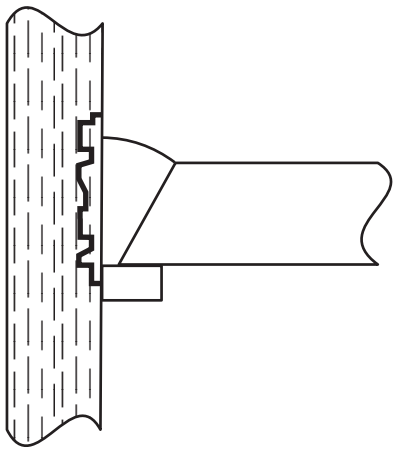

Figure 5–11. Lamellar tearing.

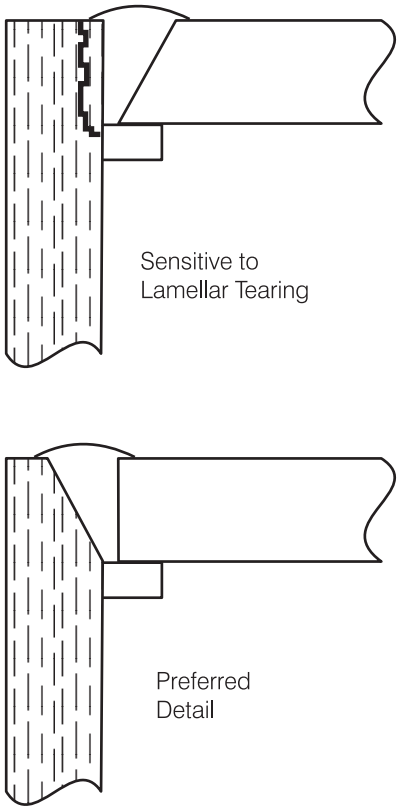

Figure 5–12. Effect of joint details on lamellar tearing.

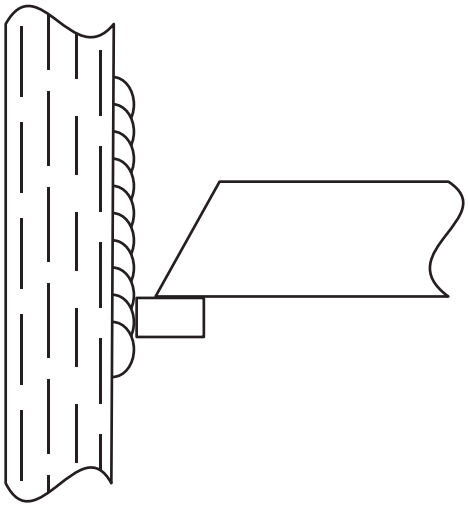

Figure 5–13. Buttering to mitigate lamellar tearing.

inclusions within the steel will help mitigate this tendency. This generally means lower sulfur levels, although the characteristics of the sulfide inclusion are also important. Current steel-making practices have helped to minimize lamellar tearing tendencies. With continuously cast steel, the degree of rolling after casting is diminished. The reduction in the amount of rolling has directly affected the degree to which these laminations are flattened, and has correspondingly reduced lamellar tearing tendencies.

The second variable involves the weld joint design. For a specific joint detail, it is often possible to modify the weld joint detail to minimize lamellar tearing tendencies. For example, on corner joints it is preferred to bevel the member in which lamellar tearing would be expected, that is, the plate that will be strained in the through-thickness direction. This is illustrated in Figure 5–12.

The incidence of lamellar tearing today is significantly reduced as compared to the past, due mostly to proper joint selection and better steel chemistry. If an incidence of lamellar tearing is encountered, the following may be helpful.

General provisions to reduce both shrinkage stresses and restraint are covered in Sections 5.5 and 5.6 of this chapter and are applicable to lamellar tearing situations. Increased preheat, helpful in mitigating some cracking tendencies, may aggravate lamellar tearing tendencies in some situations. Since most preheat on structural assemblies will be localized around the joint, extra expansion and contraction can be introduced by preheating, further straining the steel in the through-thickness direction. However, heating the entire area can help mitigate lamellar tearing in other situations.

A specialized technique that can be used to overcome lamellar tearing tendencies is the "buttering layer" technique. With this approach, a pad of sound weld metal is deposited on the surface of the steel where there might be a risk of lamellar tearing. Because the weld beads on the surface are not constrained by being attached to a second member, they solidify, cool, and shrink, inducing a minimum level of residual stress to the material on which they are placed. After the butter layer is in place, it is possible to weld upon the pad with a decreased level of concern about lamellar tearing. This concept is illustrated in Figure 5–13.

Lamellar tearing tendencies may be aggravated by the presence of hydrogen. When such tendencies are encountered, it is important to review the low hydrogen practice, examining the selection and care of electrodes.

5.5 REDUCING SHRINKAGE STRESSES

All the previously discussed forms of weld cracking, as well as lamellar tearing, are driven by the shrinkage stresses associated with the hot expanded weld and base metal. Various techniques can be used to minimize these stresses, including the following:

- Specify the smallest weld size possible, consistent with design requirements, as this will reduce the shrinkage stress. However, if cold cracking is involved (HAZ cracking, transverse cracking), increased heat input (larger weld sizes) is generally helpful.
- For a given weld size, select details that will require the least amount of weld metal.
- Control fitup. Excessive gaps increase the required weld metal, increasing shrinkage.
- Don't overweld. Make welds of the correct size, but not larger than necessary.
- Limit weld reinforcement. Reinforcement causes shrinkage stresses, just like any other weld metal.
- For a given weld size, make the weld in the fewest number of weld passes. Use larger beads, not small stringer passes.
- For double-sided joints requiring backgouging, limit the backgouging to only that which is required. The extra metal required to fill the joint will create more shrinkage stresses.
- Use welding procedures that, for a given size of weld pass, use the lowest heat input levels, which will reduce the shrinkage stress. However, if cold cracking is involved (HAZ cracking, transverse cracking), higher heat input is generally helpful.
- Use filler metal with the lowest strength level possible, consistent with design requirements (especially important to control transverse cracking).
- In general, but not always, use higher levels of preheat, and heat a greater volume of weld metal (exceptions are when such preheating changes the shape of the parts being joined or adds to the residual stresses in a member).
- Limit weld penetration, unless there is a specific advantage or reason to maintain a certain level of penetration.
- Complete highly restrained weldments without interruption. This may require around-the-clock welding in some situations.
- When around-the-clock welding is impossible, maintain around-the-clock interpass temperature control, keeping the partially welded assembly at welding temperatures at all times until the welding is complete.
- Plan the welding to ensure the assembly will need to be welded only once (e.g., eliminate the need for weld repairs).

5.6 REDUCING RESTRAINT

As has been discussed, if hot expanded weld and base metal were free to shrink without restraint, there would be no residual stresses. Reducing restraint is another option available to reduce cracking and lamellar tearing tendencies and includes the following:

- When possible, fabricate small subassemblies, and then join subassemblies into the final assembly (as opposed to fitting all the pieces together first and welding the entire assembly).
- Weld components expected to have the greatest shrinkage first, then weld the members with less anticipated shrinkage.
- Weld the most rigid components first, saving the more flexible components for welding later.
- When possible, sequence the welding of various joints so that the shrinkage movement of the parts is all toward a relatively fixed central location.
- For individual joints, balance shrinkage on opposite sides of the member, when possible.
- Tightly fit joints, particularly machined parts, are quite rigid and crack sensitive. Slight gaps of 1/32 to 1/16 in. help accommodate shrinkage. Soft steel spacer wires in between members can help in this regard; the spacer wire establishes a gap between the elements, and as the weld shrinks, the wire compresses, accommodating the volumetric shrinkage of the weld metal.
- Increased preheat, and increasing the volume of material preheated, can sometimes assist, particularly when transverse cracking is being experienced and the joint can be expanded thermally before welding.
- Preset members before welding and allow them to move during welding.

5.7 POST-WELDING STRESS REDUCTION MEASURES

As-deposited welds always have residual stresses, but post-welding operations can reduce such stresses. The most commonly applied method is thermal stress relief. For carbon and low-alloy steels, this typically involves heating the welded assembly to 1,100 to 1,200 °F and holding the assembly at that temperature an hour for each inch of thickness. Such treatment reduces, but does not totally eliminate, residual stresses.

In heating the weldment to stress relieving temperatures, the material will automatically be heated to the 400 to 450 °F range needed for a post-heat or hydrogen release soaking. In some cases, the elimination of cracking when assemblies are stress relieved are more likely attributed to the reduction in hydrogen instead of the reduction of residual stresses. For this to occur, however, the stress relief treatment must be applied before the weldment is permitted to cool.

Stress relief operations should not be approached casually. Both the steel and the weld metal must be suitable for stress relief. A form of cracking called reheat cracking can occur during stress relief, and steels alloyed with Cr, Mo, V, and B are sensitive to this phenomenon. These alloys are found in many structural steel grades. Weld metal properties may be negatively affected; although, for some alloys the properties improve significantly. Thus, knowledge of the behavior of the materials involved is important.

Peening can also be used to reduce residual stresses. Normally, when this technique is employed, peening is applied to the intermittent layers of groove welds and thus may not actually be a post-weld stress reduction measure. Peening involves mechanically deforming the weld surface, inducing compressive residual stresses that offset the residual tensile stresses. Peening is a powerful tool when used properly; unfortunately, peening is often done improperly. To be effective, the weld metal must be warm (above 150 °F) but not hot (less than 500 °F). The peening must result in mechanical deformation of the surface, preferably with a rounded, blunted tool that doesn't gouge the surface. Because of the potential for abuse, and because other methods are available, peening is not typically used for structural steel welding applications.

Stress relief is not generally an effective means of mitigating cracking tendencies for structural applications; if cracking is going to occur, it will likely occur before any stress relief can be applied. Stress relief is rarely applied to structural steel members, but when it is properly specified, it is typically used for dimensional control on assemblies being machined (which is a nontypical situation as well). When tight tolerances must be maintained on welded assemblies, thermal stress relief before machining will limit the amount of movement experienced as steel is removed.

Stress relief is sometimes inappropriately specified in hopes that it will eliminate distortion. In a welded assembly, distortion consists of two components: an elastic portion and a plastic portion. The elastic portion (which is usually small) can be eliminated by stress relief, but the plastic portion cannot.

6. Distortion

6.1 INTRODUCTION

Distortion is the geometric deviation in the shape of a part or an assembly that is observable after welding is complete. As shown in Figure 6–1, distortion may take on a variety of forms. Distortion may be a cosmetic issue, such as can be observed on fascia girders with stiffeners applied to the opposite side. In other situations, distortion may make it difficult or impossible to assemble parts into a larger assembly. Under extreme conditions, distortion can reduce the buckling strength of compression members.

Forms of distortion include angular distortion, longitudinal shortening, transverse shrinkage, twisting, warping and buckling, and longitudinal sweep or camber. Distortion is caused by the volumetric contraction of hot, expanded metal: The length, width, and depth (thickness) of the heated metal all shrink. The type of distortion experienced depends on which geometric shrinkage is involved, and how that shrinkage interacts with the surrounding steel.

The shrinkage of the hot expanded metal causes permanent distortion, as well as causing the part to flex elastically. Figure 6–2 demonstrates the elastic component of distortion. If a piece of steel is tack welded to a rigid part, when the longitudinal weld is made, the part will be restricted from distortion. When the tack welds are ground off, however, the elastic portion of the distortion will cause some "springback" that is all elastic. If the bar is simply depressed, it will return to flat, but when the force is removed, the elastic distortion returns. In this situation, there is no plastic distortion—only elastic.

AWS D1.1 Section 5, Fabrication, defines acceptable limits for distortion.

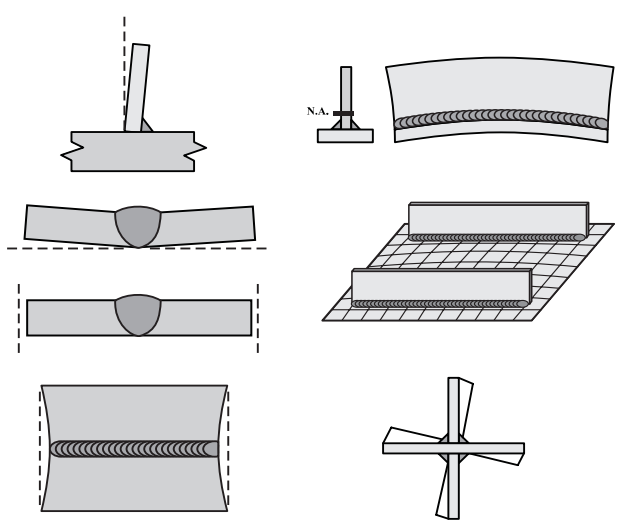

Figure 6–1. Examples of distortion.

6.2 CAUSES OF DISTORTION

Distortion is caused by the nonuniform heating that is inherent to arc welding. In and around the weld joint, the localized temperature of the steel will be raised to the melting point. Yet, only a few inches away, the steel is likely to be more than 2,000 °F cooler. Due to thermal expansion, the localized hot metal volumetrically increases, while the cooler surrounding metal does not. The expansion and contraction phenomenon is covered in detail in the context of cracking in Section 5.2 of this Guide and is equally applicable to distortion in that the same factors are involved with both.

The response of the material to the forces induced by shrinkage of the deposited weld metal and the hot adjacent metal determines whether cracking or distortion will occur. With cracking, the surrounding steel is sufficiently rigid so as to preclude part movement, resulting in the accumulation of residual stresses, eventually causing fracture. With distortion, the surrounding material is sufficiently flexible so as to enable the shrinkage strains to be accommodated by shrinking, bending, or twisting the surrounding steel. Thus thick, rigid members are more likely to crack than to distort, and thinner, more flexible systems are more sensitive to distortion.

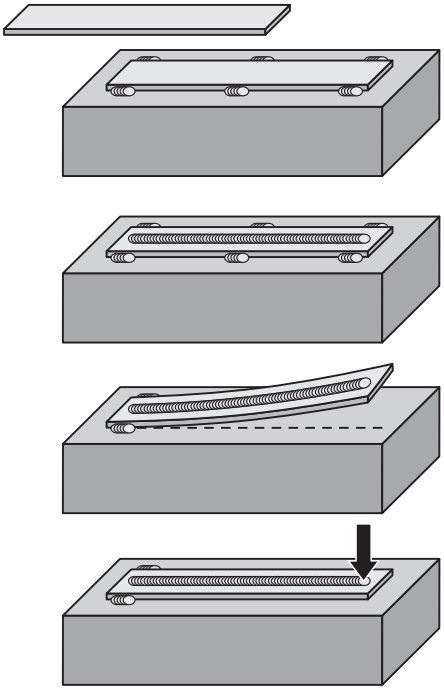

Figure 6–2. Elastic versus plastic distortion.

Hot, expanded weld metal causes distortion as it cools and shrinks, and so does the hot, expanded base metal that surrounds the weld. The shrinkage stresses are not caused by the volumetric contraction that occurs as liquid metal transforms to solid. While such volumetric changes do occur, the strains associated with this transformation do not create sufficient stresses to cause much movement, since the modulus of elasticity at this temperature is quite low.

While the driving forces for cracking and distortion are the same, the material response determines which one (if either) will occur. To control distortion, the goal is to make the assembly of parts more rigid, less flexible, and more restrained so the parts resist the shrinkage stresses. This is just the opposite of the approach used to limit cracking tendencies. To control distortion, it is preferred to use thicker members and to hold the members in place with fixtures, strongbacks, and other restraints. While effective in limiting distortion, these are also factors that increase cracking tendencies.

A variety of empirical equations have been derived to predict distortion, and several are presented below. Given the myriad factors that influence distortion (listed in Section 6.3 of this Guide), most derived equations compromise accuracy for simplicity.

Sophisticated finite-element-based distortion models have been developed that more accurately predict distortion. To be useful, such models require extensive modeling input and a good understanding of the details of the welding procedures that will be used. For typical structural applications, such tools are of interest but of limited practical use at this time.

6.3 DISTORTION CONTROL

6.3.1 General

The type of distortion will determine what techniques are applicable to limit distortion. Some control methods are applicable to all forms of distortion and are discussed here, while other methods are uniquely appropriate for only certain types of distortion; those methods are discussed in Section 6.4 of this chapter. In all cases, distortion is minimized by restricting the amount of localized, hot, expanded metal that is created during welding. Additionally, those items that stiffen the assembly to restrict movement are generally helpful in restricting distortion. An exception to this principle involves presetting of the parts, which will be discussed below.

Reducing the volume of localized expanded metal may involve any of the following: reduction in the volume of weld metal; reduction in the volume of heated base metal around the weld; and increasing the volume of heated metal away from the weld joint (thereby reducing the localized nature of the hot weld zone).

Weld metal volume can be reduced by the following measures:

- Specify the smallest weld size possible, consistent with design requirements.
- When appropriate, use intermittent welds.
- For a given weld size, select details that will require the least amount of weld metal.
- Make a multiple-pass weld of a given size with the fewest number of weld passes.
- Control fitup. Excessive gaps require more weld metal, increasing shrinkage.
- Don't overweld.
- Limit weld reinforcement.
- For double-sided joints requiring backgouging, limit the backgouging to only that which is required.
- Unless there is a specific advantage or reason for not doing so, limit weld penetration.

The importance of specifying welds of the proper size is essential for controlling distortion. Larger-than-necessary welds will naturally result in more distortion. Specification of complete joint penetration (CJP) groove welds "just to be safe" will often result in larger-than-necessary welds, with correspondingly greater distortion. Fortunately, many of the concepts that are useful for obtaining economical welded connections (discussed in Chapter 14 of this Guide) simultaneously reduce the volume of shrinking weld metal, which is what drives distortion.

The volume of hot base metal can be reduced by using welding procedures that, for a given size of weld pass, use the lowest heat input levels. Thermal energy in excess of that needed to melt filler metal and obtain fusion heats the base metal, increasing distortion.

Fortunately, those welding procedures and techniques that maximize productivity often minimize distortion. For example, high amperage submerged arc procedures, along with the resultant increase in travel speeds, typically cause less distortion than procedures for shielded metal arc welding.

The localized nature of the hot metal may be mitigated, in some cases, by heating a greater volume of metal, exceeding the minimum amount of material that would be required for the preheat needed to control only cracking tendencies. However, such efforts may actually increase the distortion experienced in some situations. For small assemblies, it may be possible to heat the whole part, not just the region surrounding the joint. This can reduce distortion if the heating and cooling of the assembly is controlled. However, for most

structural applications, this is not possible, given the size of the associated parts.

For multiple-pass welds, it is better to make the weld in the fewest number of passes. This reduces the number of heating and cooling cycles to which the member will be subjected. A few large FCAW beads will cause less distortion than will many small stringer passes, for example.

Distortion can be mitigated by drawing thermal energy out of the part. For example, copper chill bars can be placed near the weld joint and are effective in drawing the thermal energy out of the joint, provided the chill bars are kept cool. Chill bars may be made with internal water passages, enabling them to be water cooled. However, water-cooled bars should be warm, not cold, so that condensation does not develop on the surface and add water to the weld joint.

Water should not be directly sprayed on the part to draw thermal energy from the weld joint, but fans may be used to accelerate cooling. Compressed air should not be used to cool the joint; direct contact with a high-velocity stream of compressed air will cool the joint too quickly, as will water.

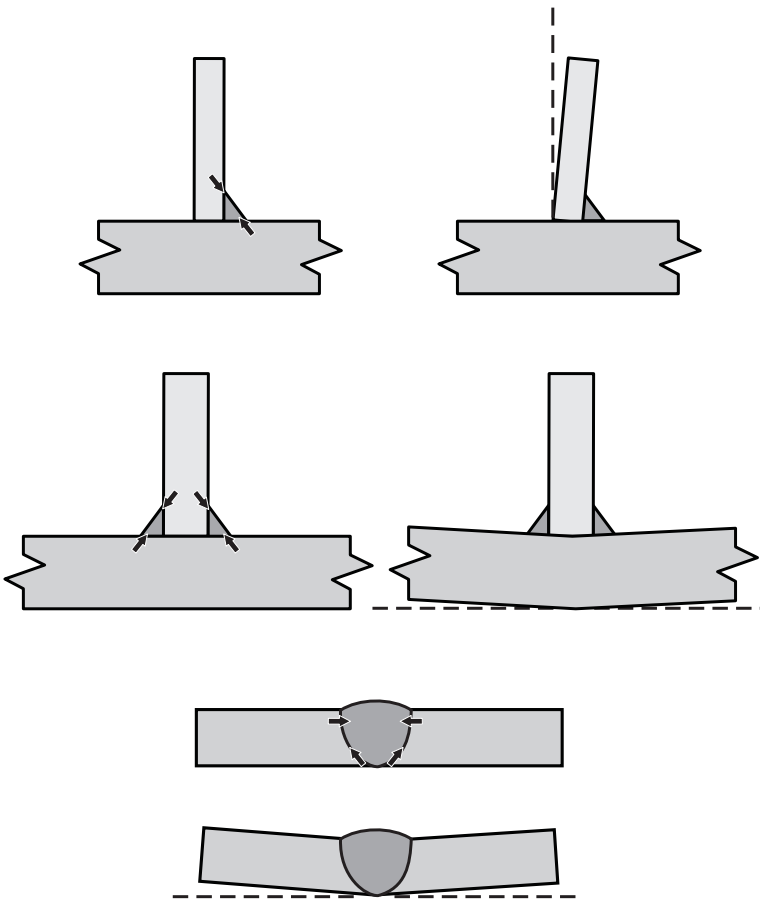

Figure 6–3. Angular distortion.

6.3.2 Angular Distortion

Angular distortion occurs due to transverse shrinkage of the weld. When the hot metal contracts laterally, it pulls flexible members toward the weld as shown in Figure 6–3. Angular distortion can be caused by any type of weld, and in any joint type. The risk of it increases as the members involved become thinner and less rigid.

In some cases, angular distortion can be offset by using double-sided welds instead of single-sided welds (see Figure 6–4a). This is often done with butt joints where the distortion caused by welding on the first side is offset by welding on the second side, as shown in Figure 6–4b. The first welds are made with an assembly that is more flexible, so the distortion associated with the first side weld is typically

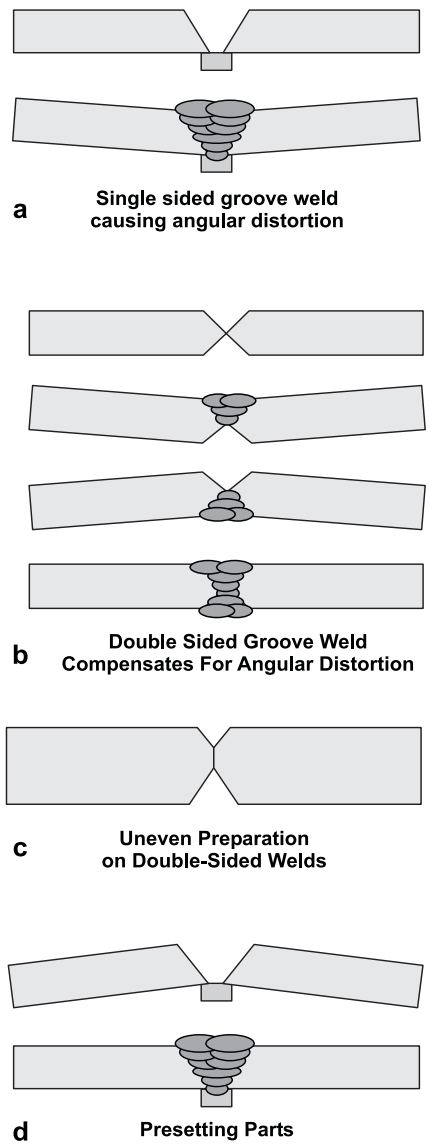

Figure 6–4. Techniques to limit angular distortion.

greater than that from the second side. To compensate for this, the two sides of the double-sided welds can be prepared with different depths, with the more shallow prepared side welded first, as shown in Figure 6–4c. In this example, the smaller groove weld is made first, allowing the larger groove weld on the other side to offset the greater rigidity that would be experienced after the first weld is in place.

Members can be preset to minimize distortion, as shown in Figure 6–4d.

It should be noted that double-sided welds do not always eliminate all forms of angular distortion. For example, in Figure 6–3, the double-sided fillet welds still cause the horizontal member to angularly distort.

A simplified formula to predict distortion is as follows (Blodgett, 1966):

$$\Delta_{angular} = (0.02\ W\omega^{1.3})/t^2$$

where

$\Delta_{angular}$ = the deflection, measured at the tips of the flanges, in.
W = the width of the flange, in.
ω = the fillet weld size, in.
t = the thickness of the flange, in.

For computations based in metric units (mm), the coefficient 0.02 becomes 0.19.

6.3.3 Transverse Shrinkage

As the weld shrinks in width, it will cause transverse shrinkage when the attached parts are free to move, as shown in Figure 6–5. This type of shrinkage is normally negligible, unless a series of parallel welds cause such shrinkage to accumulate to a significant dimension. This may occur when a series of chord splices are made on a long truss, in which case this shrinkage cannot be ignored.

The amount of transverse shrinkage is directly related to the volume of shrinking weld metal and can be estimated from the following:

$$\Delta_{transverse} = (0.10\ A_\omega)/t$$

where

A_ω = cross-sectional area of the weld metal, in.^{2}
t = thickness of the members joined, in.

The above relationship also suggests that the transverse shrinkage is 10 percent of the average width of the weld width.

Restraint is a factor that will affect the amount of transverse shrinkage that will be experienced. The above relationship assumes that there is no unusual restraint against shrinkage.

For weldments where transverse shrinkage is a concern, it is sometimes possible to deliberately set the joint wider than necessary and allow the transverse shrinkage to occur. If this is properly done, a part of the correct size will be obtained.

6.3.4 Longitudinal Shortening

Longitudinal shrinkage of the weld will cause the assembly to shorten, as shown in Figure 6–6. The same shrinkage may result in twisting, longitudinal sweep or camber, or buckling and warping, which are discussed in the next three subsec-

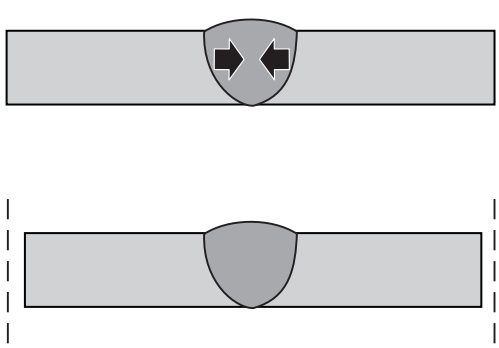

Figure 6–5. Transverse shrinkage.

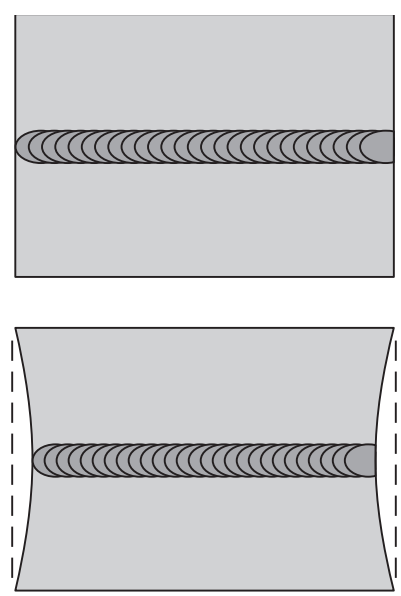

Figure 6–6. Longitudinal shortening.

tions. Longitudinal shortening is typically negligible, unless the weldment is required to be held to unusually tight dimensions or the member is very long. Many weldments, such as plate girders, and fabricated column sections fall into the latter category.

The effects of longitudinal shortening are difficult to predict. Bridge fabricators making long plate girders often compensate for this shrinkage by making girders longer than necessary, and cutting the final assembly to length.

6.3.5 Twisting

Longitudinal shrinkage causes the weld region to shrink, while the outside steel remains unchanged in length. If the shrinkage stresses are large, and if the assembly has little resistance to twisting (as is the case for open shapes such the cruciform shown in Figure 6–7), the shrinkage can cause a longitudinal twisting of the assembly. Such twisting does not occur in closed sections such as boxes, where the torsional resistance is much higher.

Deep plate girders made with thin web members may similarly twist, resulting in members that look severely deformed when the girder is hung from a crane. Yet, the dead weight of the same girder may allow it to lie flat when laid down. If this is the case, the distortion is caused by stresses that are less than the yield point; that is, these deformations are elastic. While such twisting may cause some erection difficulties, if it can be assembled, the serviceability of the member should not be impaired.

In addition to all of the standard methods used to reduce shrinkage stresses, the primary means to minimize twisting is to increase the torsional resistance of the section. Typically, this means that the member should have an enclosed vs. an open cross-section. For example, I-shaped plate girders (an open cross-section) will experience such twisting under some circumstances, but box sections (enclosed cross-sections) will not.

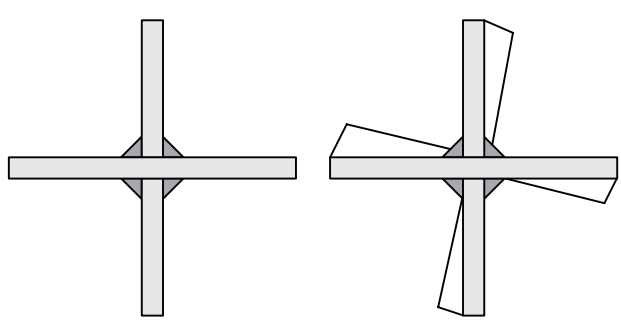

Figure 6–7. Twisting.

6.3.6 Longitudinal Sweep or Camber

Longitudinal shrinkage of the weld or groups of welds may cause a long assembly to distort, resulting in curvature along the longitudinal axis. Depending on the relationship of the center of gravity of the welds and the neutral axis of the section, the deviation may form a negative or positive camber (e.g., deviation in the vertical plane) or a horizontal sweep to the left or right (e.g., deviation in the horizontal plane). Figure 6–8 illustrates welds that have resulted in a positive (upward) camber.

When the center of gravity of the welds is above the neutral axis of the section, a negative camber is expected. When the center of gravity of the welds is to the left of the neutral axis of the section, a sweep to the left is expected.

The following relationship may be used to predict longitudinal sweep or camber:

$$\Delta_{londitudinal} = (0.005 A_{\omega} L^2 d)/I$$

where

$\Delta_{londitudinal}$ = the maximum deviation of the piece from the original work line, in.

A_{ω} = the total cross-sectional area of the weld metal (including that of multiple welds, if used), in.^{2}

L = length of the member, in.

d = distance from the center of gravity of the various welds and the neutral axis of the section, in.

I = Moment of inertia for the section, in.^{4}

Experience and experimentation has shown that the above equation will predict the actual sweep or camber to an accuracy of about +/- 20 percent.

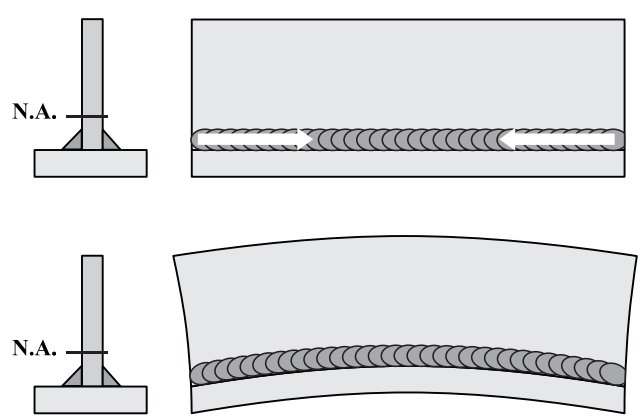

Figure 6–8. Longitudinal camber.

6.3.7 Buckling and Warping

Longitudinal shrinkage may cause thin surrounding base metal to buckle or warp. This occurs when the base metal has little resistance to compression. Buckling can be experienced in plate girder panels between stiffeners, and such an example is illustrated in Figure 6–9. Buckling usually contains elements of angular distortion as well. Warping is associated with one free edge.

As would be expected, the tendency toward these forms of distortion depends on the critical buckling stress associated with the localized section. Such buckling resistance significantly increases with increases in thickness and similarly decreases with increased lengths. For applications where control of buckling and warping is critical, using slightly thicker members is quite helpful.

Even small levels of buckling distortion can be visually disconcerting, particularly when light colored, glossy paints are applied. Slight waviness can cast shadows that accent minor changes to the flatness of panels.

Heat shrinking, discussed in Section 12.9 of this Guide, can be used to shrink the excess metal out of the distorted panels.

6.3.8 Rotational Distortion

Rotational distortion is caused by transverse shrinkage and is typically associated with thinner members (sheet metal) that are relatively narrow compared to their length. With rotational distortion, the joint can either open up during welding or close tight (or, in the case of a thin member, overlap on top of each other) as shown in Figure 6–10. The speed of welding and the heat input determines whether the joint opens or closes; when high travel speeds are used, the joint tends to open up, whereas for slower travel speeds, it tends to close. At issue is the rate of thermal conductivity as compared to the rate at which the shrinking weld metal advances with respect to the joint.

Rotational distortion can be mitigated by clamping the members rigidly to increase the restraint against rotation. As shown in Figure 6–11a, tack welds are helpful in keeping the joint from opening or closing. Sometimes, the part can be preset, as shown in Figure 6–11b, particularly if the tendency is for the joint to close as welding progresses. Finally, a back stepping technique can be used, as shown in Figure 6–11c. While the general weld progression is from left to right in this example, individual weld segments are deposited by moving from right to left. The start of each weld segment fixes the joint and restricts further movement.

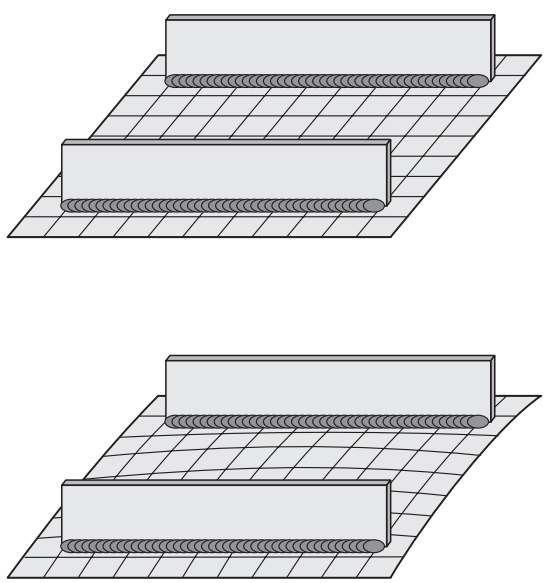

Figure 6–9. Warping and buckling.

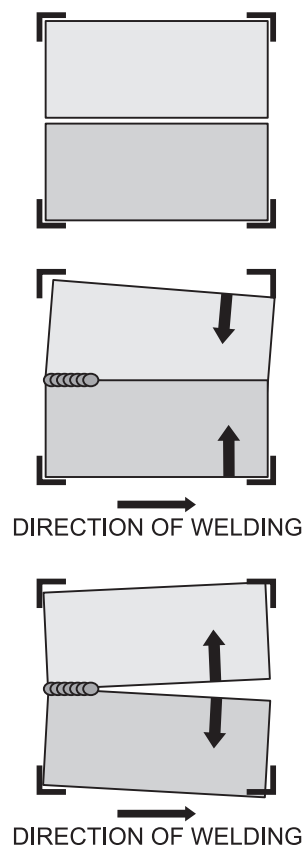

Figure 6–10. Rotational distortion.

While the backstepping technique can be successful in overcoming rotational distortion, it provides little or no assistance in minimizing other types of distortion. Some welders who know of the power of this approach with respect to rotational distortion are prone to apply this technique in situations where it offers no advantage. Moreover, because the backstepping technique is typically a slower method of making the weld, it may actually increase the level of distortion experienced.

6.4 SPECIALIZED DISTORTION CONTROL MEASURES

Some forms of distortion can be controlled with the specific techniques discussed in this section.

6.4.1 Adding Restraint

Restraint can be added to resist the shrinkage stresses that are applied to the weldment during and after welding, ranging from tack welds to strongbacks to welding fixtures. Anything that can keep the parts from moving when the hot metal begins to shrink is helpful. The natural sag of long members that are simply supported can help to resist some types of distortion.

Restraint can be added by clamping or tack welding symmetrical parts back-to-back, causing the second part to resist the shrinkage that tends to move the first part. To offset

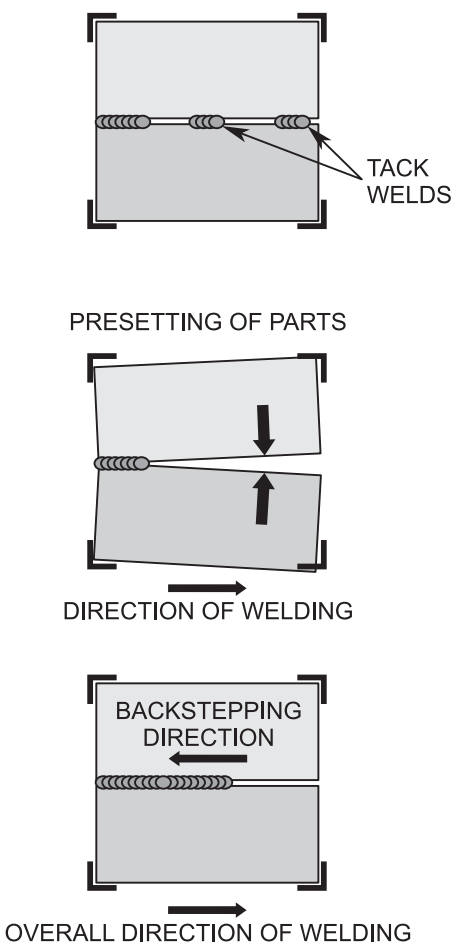

Figure 6–11. Measures to limit rotational distortion.

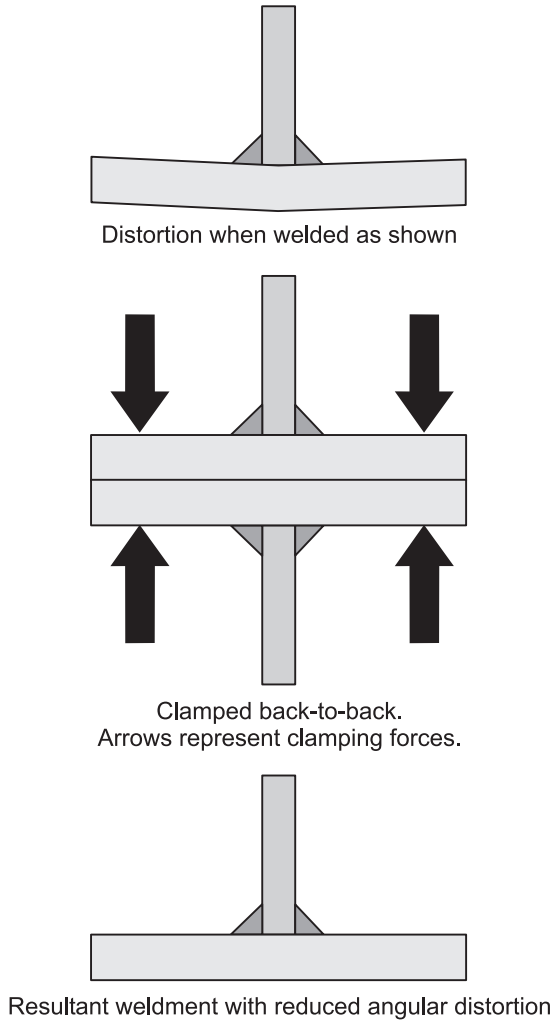

Figure 6–12. Back-to-back clamping adding restraint.

angular distortion, the tips of the flange in the T-section can be clamped against the flange of another T-section, and the plastic portions of distortion will offset each other, as illustrated in Figure 6–12. With respect to longitudinal camber or sweep, as shown in Figure 6–13, back-to-back clamping can keep such members linear. In either illustration, large clamping forces are needed to resist the shrinkage and when the clamping forces are removed, there will always be some elastic springback. If such springback is unacceptable, wedges can be inserted between the parts before clamping.

6.4.2 Weld Placement

When welds are designed to be on or near the neutral axis of a section, longitudinal shrinkage does not cause sweep or camber because the center of gravity of the welds is concurrent with the neutral axis of the section. Figure 6–14 illustrates this principle.

Welds may be balanced around the neutral axis of a section, as shown in Figure 6–15. This is easy to do, as many structural shapes automatically provide for this option. However, in order to be effective, the whole cross-section must work as a unit. Using the first image in Figure 6–15 as an example, it would not work to first fabricate a T and then add the flange. The whole assembly must be tack welded together first, before the four final welds are made.

6.4.3 Welding Sequence

Longitudinal sweep or camber can sometimes be minimized or eliminated through a carefully and properly planned and executed welding sequence. Complicated assemblies where the center of gravity of the welds is some distance from the neutral axis of the section can sometimes be broken down into subassemblies where the weld center of gravity and the section neutral axis are concurrent. Consider the two sequences illustrated in Figure 6–16.

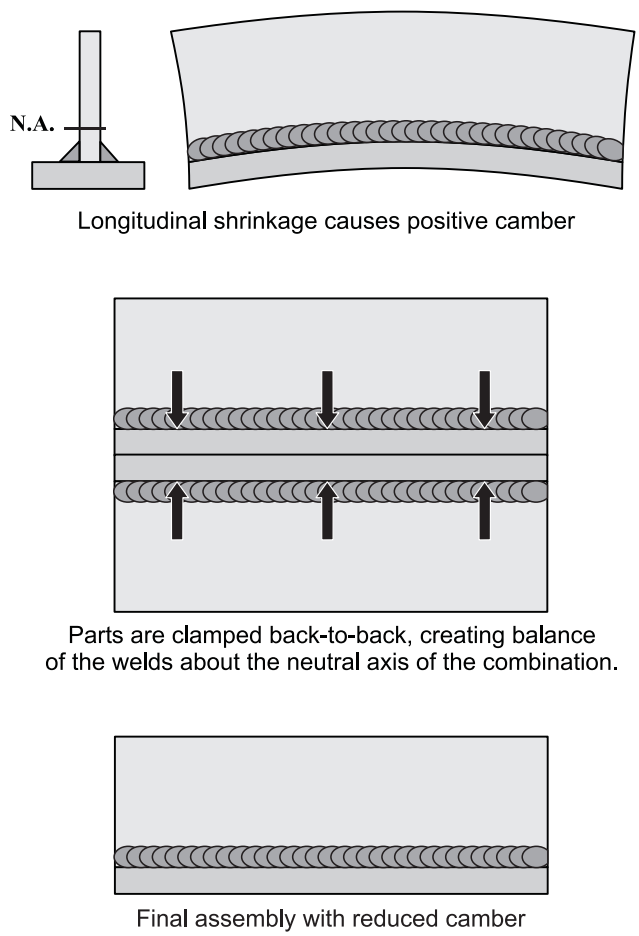

Figure 6–13. Welding near the neutral axis.

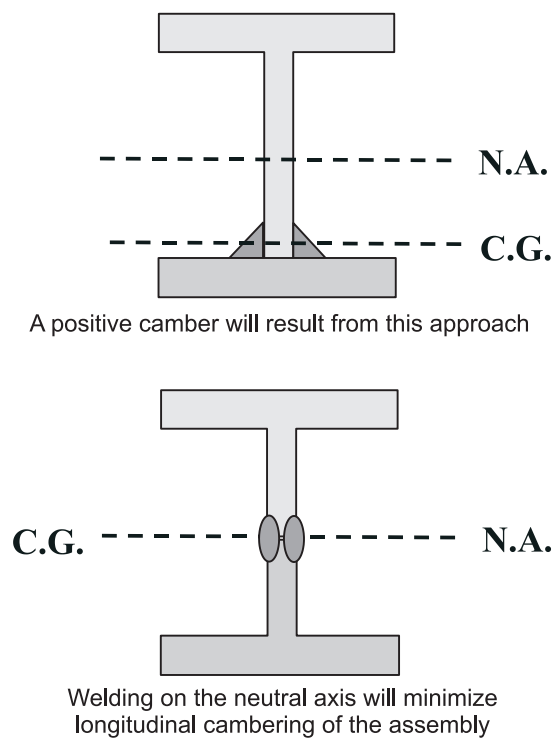

Figure 6–14. Welding on the neutral axis.

In the first sequence, the three members are all tack welded together, and the four welds are made. Because of the nonsymmetrical nature of the shape, the center of gravity of the welds is displaced from the neutral axis of the shape by 0.442 in. (e.g., 1.5 in. – 1.058 in.). In the second sequence, the T-section is fabricated first. Notice that for this particular geometry, the weld center of gravity and the section neutral axis are concurrent. While the part may shrink longitudinally, it should still stay straight. Next, the T-section is added to the bottom flange. Again, the weld center of gravity and the section neutral axis are concurrent, and no sweep or camber would be expected.

While this simple illustration does not replicate the scale of the real members that would be used in structural steel applications, the same principle can and has been successfully applied on larger assemblies.

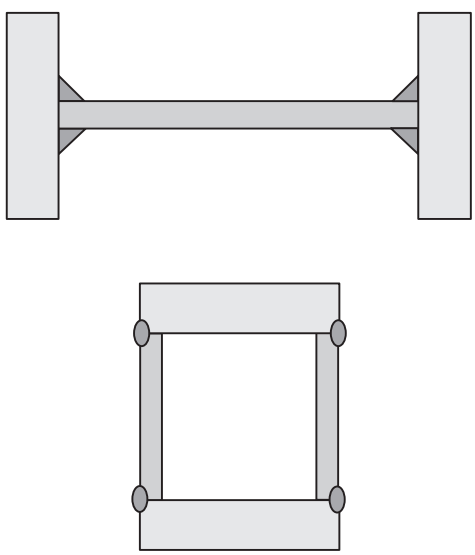

Figure 6–15. Balancing welds about the neutral axis.

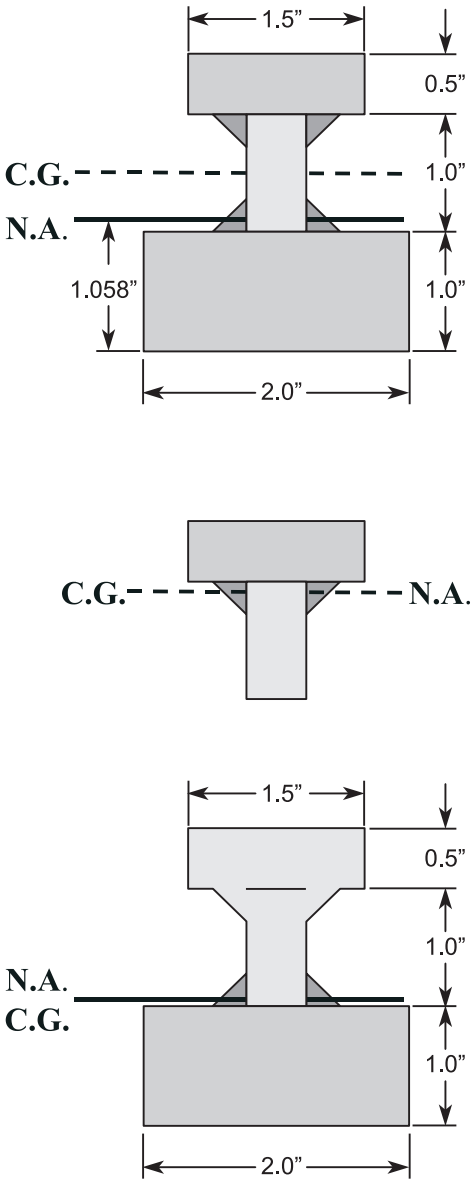

Figure 6–16. Sequencing the order of welding.

7. Welding Procedure Specifications

7.1 INTRODUCTION

Within the welding industry, the term "welding procedure specification" (or WPS) is used to denote the combination of variables that are to be used to make a certain weld. The terms "welding procedure" or simply "procedure" may be used. Fundamentally, a WPS is a communication tool explaining all of the parameters by which a particular weld is to be made. Through the use of a WPS, the engineer, contractor, welder, and inspector are provided the various details associated with making a particular weld.

Welding procedure specifications are important because of the myriad variables that can affect the quality of a weld. It is insufficient to simply purchase good materials (filler metals and base metals), put them into the hands of a skilled welder, and expect that good results will always be achieved, since the quality of the weld depends on complex chemical and thermal reactions. The filler metal must be appropriate for the particular steel being welded. The preheat level for the steel must be correct, and the electrode must be run on the proper polarity with an appropriate combination of amperage, voltage, travel speed, and other factors.

While a skilled and knowledgeable welder may have learned some or all of this information from experience, the inspector on the same job may have no knowledge as to how a specific weld is to be made. Conversely, the less experienced welder may need to be given detailed information to ensure the welding is properly performed. Even for the experienced welder, who may know from past practices how the welding is to be performed, changes in specifications, for example, may necessitate changes in practice. Through a WPS, everyone involved with the welding operation can work with a common understanding.

AWS D1.1 Provision 5.5 requires written welding procedure specifications for all welding. Each fabricator or erector is responsible for the development of WPSs (AWS D1.1, Provisions 4.1.1.1 and 4.6). The inspector is obligated to review the WPSs and to make certain that production welding parameters conform to the requirements of the code (AWS D1.1, Provision 6.3.1).

AWS D1.1 allows for two types of WPSs: those that are "prequalified" and those that are "qualified." These are addressed at length in Sections 7.4 and 7.5 of this chapter. In brief, prequalified WPSs are subject to many prescribed rules within the code, and when all of the regulated variables comply with these limits, the WPS is prequalified and does not need to be tested before it is used. In contrast, all qualified WPSs are subject to mechanical and nondestructive testing. Regardless of whether WPSs are prequalified or qualified by test, they are required to be written. One prevalent misconception is that if the actual parameters under which welding will be performed meet all of the conditions for "prequalified" status, written WPSs are not required; this is, however, an incorrect understanding of AWS D1.1 requirements..

7.2 WRITING WELDING PROCEDURE SPECIFICATIONS

The contractor is responsible for the development of welding procedure specifications. This task is typically assigned to a welding specialist within the contractor's organization who generates or writes the WPS. Many issues must be considered when selecting welding procedure values to be included on the WPS. While all welds must have fusion to ensure their strength, the required level of penetration is a function of the joint design and the weld type. All welds are required to deliver a certain yield and/or tensile strength, although the exact level required is a function of the connection design and the base metal strength. Some welds are required to deliver minimum specified levels of notch toughness, while others are not. Determination of the most efficient means by which these conditions can consistently be achieved is the task of knowledgeable welding technicians and engineers who then create the written welding procedure specifications that reflect the applicable code and specification requirements.

The written WPS then communicates those requirements to the welders. The welder is expected to be able to follow the WPS, although the welder may not know how or why each particular variable was selected. Welders are expected to ensure welding is performed in accordance with the WPS. Inspectors do not develop WPSs, but should ensure that they are available and are followed.

7.3 USING WELDING PROCEDURE SPECIFICATIONS

Since the WPS is a communication tool, it follows that it must be available to foremen, inspectors, welders, and others involved with the welding operations. A WPS locked away in a cabinet serves little purpose if it never gets to the shop floor or the erection site.

Table 7–1. Specific Requirements for Various Weld Types	
Weld Type	**AWS D1.1 Reference**
Fillet Welds	Provision 3.9
Plug and Slot Welds	Provision 3.10
PJP Groove Welds	Figure 3.3 and Provision 3.10
CJP Groove Welds	Figure 3.4 and Provision 3.11

AWS D1.1 is not prescriptive in its requirements regarding the availability and distribution of WPSs. Some shop fabricators issue each welder employed in their organization a set of welding procedures that are typically retained in the welder's locker or tool box. Others list WPS parameters on shop drawings. Some company bulletin boards feature listings of typical WPSs used in the organization. Regardless of the method used, WPSs must be available to those authorized to use them.

It is in the contractor's best interest to ensure that WPSs are followed by the welders, both from a quality and a productivity perspective. Improper welding parameters can directly affect weld quality. Additionally, less-than-optimal parameters can result in lower actual deposition rates and travel speeds than would normally be expected.

7.4 PREQUALIFIED WELDING PROCEDURE SPECIFICATIONS

AWS D1.1 provides for the use of prequalified WPSs. Prequalified WPSs are those that have a history of acceptable performance, and therefore they are not subject to the qualification testing imposed on all other welding procedures. The use of prequalified WPSs does not preclude the requirement that they be available in a written format. The use of prequalified WPSs still requires that the welders be appropriately qualified. All of the workmanship provisions imposed in the fabrication section of the code apply to prequalified WPSs. The only code requirement exempted by prequalification is the nondestructive and mechanical testing required for qualification of welding procedures.

Prequalified welding procedures must conform to all the prequalified requirements in the code. Failure to comply with a single condition of prequalification eliminates the opportunity for the welding procedure to be prequalified (AWS D1.1, Provision 3.1). Some of those requirements are included in the following:

- The welding process must be prequalified. Only SMAW, SAW, GMAW (except GMAW-S), and FCAW WPSs may be prequalified (AWS D1.1, Provision 3.2.1).
- The base metal/filler metal combination must be prequalified. Prequalified base metals, filler metals, and combinations are shown in AWS D1.1, Table 3.1.
- The minimum preheat and interpass temperatures prescribed in AWS D1.1, Table 3.2 must be employed.
- Specific requirements for the various weld types must be maintained, as summarized in Table 7–1.

Figures 3.3 and 3.4 of AWS D1.1 contain the prequalified joint details for groove welds, and such details must be used for prequalified WPSs. Even when such details are employed, the welding procedure must be qualified by test if other prequalified conditions are not met. For example, if a prequalified detail is used on an unlisted steel, the welding procedures must be qualified by test.

The use of a prequalified welding joint detail does not exempt the engineer from exercising engineering judgment to determine the suitability of the particular procedure for the specific application (AWS D1.1, Provision 3.1). Alternatively stated, a prequalified joint detail can be misapplied, as shown in Figure 7–1. This detail was used in a project and, not surprisingly, the center plate tore in the through-thickness direction due to the significant shrinkage stresses that were imposed on it. While prequalified, this detail was inappropriate for the application.

Prequalified status requires conformance to a variety of procedural parameters that are contained in AWS D1.1, Table 3.7, and include maximum electrode diameters, maximum welding current, maximum root pass thickness, maximum fill pass thickness, maximum single-pass fillet weld sizes, and maximum single pass weld layers. The individual developing the various combination of variables listed on the WPS must ensure that these limits will be met when the WPS is used as written.

In addition to all of the preceding requirements, welding performed with a prequalified WPS must be in conformance with the other code provisions contained in AWS D1.1 Section 5, Fabrication, which is applicable to all fabrication done in accordance with the code.

The code does not imply that a prequalified WPS will automatically achieve the quality conditions required by the code, even in the hands of a qualified welder. It is the contractor's responsibility to ensure that the particular parameters selected within the requirements of the prequalified WPS are suitable for the specific application. An extreme example will serve as an illustration.

Consider a (hypothetical) proposed WPS for making a ¼-in. fillet weld on a ⅜-in.-thick piece of ASTM A36 steel in the flat position. The weld type (a fillet) and steel (ASTM A36) are prequalified. SAW, a prequalified process, is selected. The filler metal selected is F7A2-EM12K, meeting the requirements of Table 3.1. No preheat is specified since it would not be required, according to Table 3.2. The electrode diameter selected is 3⁄32 in., less than the ¼-in. maximum specified in Table 3.7. The maximum single-pass fillet weld size in the flat position is unlimited in Table 3.7, so the ¼-in. fillet size can be prequalified. The current level selected for making this particular fillet weld is 800 amps, less than the 1,000 amp maximum specified in Table 3.7. Thus, all of the applicable prequalified conditions have been met.

However, the current level (800 amps) imposed on the electrode diameter (3⁄32 in.) for the thickness of steel (⅜ in.) on which the weld is being made is inappropriate—melt-through would occur. It would not meet the requirements stated in AWS D1.1 Provision 5.3.1.2, stipulating that the size of electrode and amperage be suitable for the thickness of material being welded. This illustration demonstrates the fact that compliance with all prequalified conditions does not guarantee that the combination of selected variables will always generate an acceptable weld.

7.5 QUALIFIED WELDING PROCEDURE SPECIFICATIONS

Most welding of steel buildings in the United States is performed in accordance with prequalified WPSs. However, bridge welding is usually performed with WPSs that are qualified by testing. The primary reason for this difference is that weld metal notch toughness is a typical requirement for bridge applications, and the notch toughness of the actual deposited weld metal is sensitive to the welding procedures used. For particularly critical welds in buildings, regardless of the application, the engineer may require and specify in contract documents that the WPSs be qualified by test.

The particular welding conditions may preclude WPS prequalification, since one or more variables may be out of

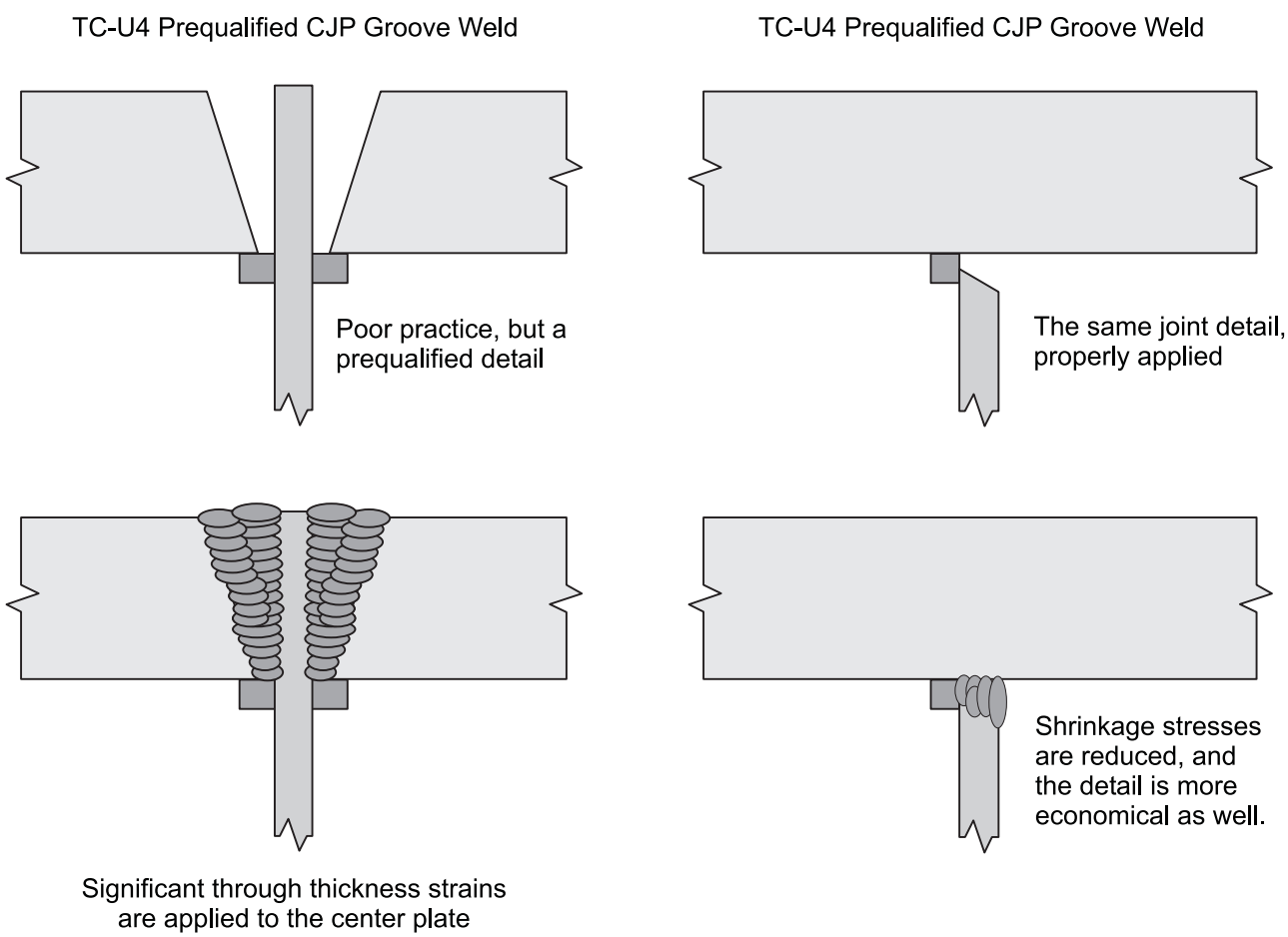

Figure 7–1. Misuse of Prequalified Joint Details.

compliance. For example, AWS D1.1 requires all electroslag WPSs to be qualified by test. Steels with a minimum specified yield strength equal to or greater than 90 ksi must be qualified by test. Other such conditions exist as well.

To qualify a WPS, the contractor must first weld a test plate that will be subject to a variety of nondestructive and mechanical tests. The welding variables and parameters used during the test, as well as the results from the various tests, are recorded on a Procedure Qualification Record, or PQR. If the testing demonstrates that all the AWS D1.1 requirements and job specifications have been met, then the contractor can develop a specific WPS based on these results. At a minimum, the parameters used in making the test weld will constitute a valid WPS. The values recorded on the PQR are simply transcribed to a separate form, now known as a WPS rather than a PQR.

It is possible to write more than one WPS from a successful PQR. Welding procedures that are sufficiently similar to those tested can be supported by the same PQR. Significant deviations from the PQR conditions, however, necessitate additional qualification testing. Changes that are significant enough to warrant additional testing are called essential variables, and are listed in AWS D1.1 Tables 4.5, 4.6, and 4.7. For example, consider an SMAW welding procedure that is qualified by test using an E8018-C3 electrode. From that test, it would be possible to write a WPS that utilizes E7018 (since this is a decrease in electrode strength), but it would not be permissible to write a WPS that utilizes E9018-G electrode (because Table 4.5 lists an increase in filler metal classification strength as an essential variable). It is important to carefully review the essential variables in order to determine whether a previously conducted test may be used to substantiate the new procedure being contemplated.

AWS D1.1, Table 4.8 defines what changes can be made in the base metals used in production vs. qualification testing. If WPS qualification is performed on a nonprequalified joint geometry, and acceptable test results are obtained, WPSs may be written from that PQR utilizing any of the prequalified joint geometries (AWS D1.1 Table 4.5, Item 32).

7.6 EFFECTS OF WPS VARIABLES

The effects of the different welding variables depend somewhat on the welding process being employed, but general trends apply to all the processes. It is important to distinguish the difference between constant current (CC) and constant voltage (CV) electrical welding systems. Shielded metal arc welding is always done with a CC system. Flux cored welding and gas metal arc welding generally are performed with CV systems. Submerged arc may utilize either.

7.6.1 Amperage

Amperage is a measure of the amount of current flowing through the electrode and the work. It is a primary variable in determining heat input. Generally, an increase in amperage means higher deposition rates, deeper penetration, and more admixture. The amperage flowing through an electrical circuit is the same, regardless of where it is measured. An acceptable amperage range is listed on the WPS.

7.6.2 Arc Voltage

Arc voltage is the voltage drop associated with the arc itself. Theoretically, it is measured from the tip of the electrode to the weld pool. Arc voltage is directly related to arc length; as the arc voltage increases, the arc length increases. For semiautomatic welding on a constant voltage system, the voltage is determined primarily by the machine setting, so the arc voltage is relatively fixed. For SMAW on CC systems, the arc voltage is determined by the arc length, which is manipulated by the welder. As arc lengths are increased with SMAW, the arc voltage will increase, and the amperage will decrease. Arc voltage directly affects the heat input computation. For wire-fed processes, an arc voltage range is listed on the WPS.

The voltage in a welding circuit is not constant, but is composed of a series of voltage drops. While the theoretical arc voltage should be measured from the tip of the electrode to the weld pool, this is obviously impractical. In semiautomatic welding, arc voltage is typically estimated by taking a reading from a point on the wire feeder (where the gun and cable connection is made), to the workpiece. For SMAW welding, voltage is not usually monitored, since it is constantly changing and cannot be controlled, except by the welder.

The total voltage in a welding circuit is not constant but is composed of a series of voltage drops. Considering a constant voltage semiautomatic circuit as an example; there is a voltage drop associated with the welding leads from the power source to the wire feeder. Another drop is associated with the gun and cable assembly. From the contact tip to the arc, there is a drop associated with the electrode extension. Next, there is the arc voltage, followed by drops associated with the work piece to work clamp connection, and then the work lead that eventually connects to the power supply. When voltage is measured at the power supply, misleading information can be acquired since all of these voltage drops will be measured. Making the measurement as close to the arc as is practical provides more meaningful data.

7.6.3 Travel Speed

Travel speed, measured in inches per minute, is the rate at which the electrode is moved relative to the joint, or for automated systems, the speed at which the work is moved under a

fixed torch. All other variables being equal, travel speed has an inverse effect on the size of the weld beads. As the travel speed increases, the weld size will decrease. Extremely low or high travel speeds may result in weld fusion problems. Travel speed is a key variable used in computing heat input; reducing travel speed increases heat input. The WPS lists a range of acceptable travel speeds.

7.6.4 Wire Feed Speed

For automatic and semiautomatic welding processes, wire feed speed is a measure of the rate at which the electrode is passed through the welding gun and delivered to the arc. Typically measured in inches per minute (ipm) the wire feed speed is proportional to deposition rate, and directly related to amperage. When all other welding conditions are maintained constant (e.g., the same electrode type, diameter, arc voltage, and electrode extension), an increase in wire feed speed will directly lead to an increase in amperage.

For slower wire feed speeds, the ratio of wire feed speed to amperage is relatively constant and linear. For higher levels of wire feed speed, it is possible to increase the wire feed speed at a disproportionate rate as compared to the increase in amperage. When these conditions exist, the deposition rate per amp increases, but at the expense of penetration.

For automatic or semiautomatic processes, it is typical to report either amperage or wire feed speed, but not both. Wire feed speed is the preferred method of maintaining welding procedures for constant voltage wire feed processes. The wire feed speed can be independently adjusted, and measured directly, regardless of the other welding conditions. It is possible to utilize amperage as an alternative to wire feed speed, although the resultant amperage for a given wire feed speed may vary, depending on the polarity, electrode diameter, electrode type, and electrode extension. AWS D1.1 permits the use of wire feed speed control instead of amperage, providing a wire feed speed to amperage relationship chart is available for comparison.

7.6.5 Electrode Extension

For automatic and semiautomatic welding processes, the length of electrode that extends beyond the contact tip to the arc is known as the electrode extension. It is colloquially known as "stickout" or ESO (electrical stickout). The proper electrode extension depends on the electrode type and diameter. With a constant voltage system, when the electrode extension is increased without any change in wire feed speed, the amperage will decrease. This results in less penetration and less admixture.

7.6.6 Contact Tip to Work Distance

The contact tip to work distance (CTTW, sometimes abbreviated CTW) is the electrode extension, plus the arc length. This is the physical distance from the contact tip to the work, and for automatic welding, it is typically set by the welder. CTTW is usually the electrode extension dimension, plus ⅛ to ¼ in. Changes in CTTW have the same effect as changes to the electrode extension.

7.6.7 Electrode Diameter

The diameter of the electrode determines how much current it can carry. Larger electrodes can carry higher welding currents. For SMAW electrodes, the diameter is that of the steel core and does not include the coating. The diameter of the electrode to be used is listed on the WPS.

7.6.8 Polarity

Polarity in direct current (DC) describes the direction of current flow. Positive polarity, also called reverse polarity, is achieved when the electrode lead is connected to the positive terminal of the power supply, and the work lead is connected to the negative terminal. Negative polarity (or straight polarity) occurs when the electrode is connected to the negative terminal and the work lead to the positive terminal. Alternating current (AC) is not a polarity, but a current type. With AC, the electrode is alternately positive and negative. The polarity to be used is listed on the WPS.

Submerged arc is the only process that commonly uses either electrode positive or electrode negative polarity for the same type of electrode. For a fixed wire feed speed, a submerged arc electrode will require more amperage on positive polarity than on negative, and will result in deeper penetration.

7.6.9 Heat Input

Heat input (sometimes called "energy input") is a mathematical estimate of the thermal energy transferred from the arc to the base metal. The following equation is typically used to compute heat input:

$$H = (60EI)/1{,}000S$$

where

H = heat input, (KJ/in.)
E = arc voltage, (Volts)
I = current (Amps)
S = travel speed, (in./min)

Higher levels of heat input typically add more thermal energy into a weld and cause the weld to cool more slowly. However, because amperage is related to deposition rates, and travel speeds are related to weld sizes, higher heat input levels commonly result in larger weld cross-sectional areas and larger heat-affected zones, which may decrease the

mechanical properties in that region. Higher heat input usually results in slightly decreased yield and tensile strength in the weld metal and generally lower notch toughness because of the interaction of bead size and heat input. Heat input is seldom recorded on the WPS, but can be determined from values that are recorded.

7.6.10 Preheat and Interpass Temperature

Preheat and interpass temperature are used to control cracking tendencies, typically in the base materials. Preheat is the temperature of the steel before the arc is initiated. In multiple-pass welds, the interpass temperature is the temperature of the steel before subsequent weld passes are initiated. The proper values for these thermal controls are dependent on the type, composition, and thickness of base metal.

Preheat must be sufficient to prevent cracking. AWS D1.1 provides minimum preheat temperatures for various prequalified steels. Higher preheat temperatures may be required for some situations.

The interpass temperature can affect the mechanical properties of the deposited weld metal. For most carbon-manganese-silicon systems, a moderate interpass temperature promotes good notch toughness. Interpass temperatures greater than 550 °F may negatively affect notch toughness. When the base metal receives little or no preheat, or when low interpass temperatures are used, the resultant rapid cooling may also lead to a deterioration in the ductility and notch toughness of the weld metal.

Preheat and interpass temperatures are specified on WPSs, often as a function of the thickness.

7.6.11 Post-Heat

Post-heat involves heating a weld joint after welding to a prescribed temperature, and then holding it at that temperature for a given length of time. Temperatures and times vary, but 400 to 450 °F with a time of one hour per inch of thickness is typical. The purpose of a post-heat is to diffuse any remaining hydrogen that might cause cracking. Post-heat is not normally required, but when necessary, is specified on the WPS.

7.6.12 Stress Relief

Weldments or localized portions of weldments may be required to be thermally stress relieved. Temperatures and times vary, but 1,100 to 1,150 °F, with a time of one hour per inch of thickness, is typical. While stress relief may be specified for multiple reasons, the most common purpose is to control dimensional stability on weldments subject to machining. It is rarely needed for structural steel applications, but when necessary, is specified on the WPS.

8. Weld Quality

8.1 INTRODUCTION

A weld must be of an appropriate quality to ensure that it will satisfactorily perform its function over its intended lifetime. Weld "quality" is therefore directly related to the purpose the weld must perform. Codes or contract documents define the required quality level for a specific project. A weld that meets those requirements is therefore a quality weld. The implication is that a particular weld may be a quality weld for one application but not acceptable for another, depending on the specific requirements for the different applications.

All welds contain discontinuities, which are defined as interruptions in the typical structure of the material, such as a lack of homogeneity in its mechanical, metallurgical, or physical characteristics (AWS A3.0). Such irregularities are not necessarily defects. Welds are not required to be "perfect." A defect is defined as a discontinuity that is unacceptable with respect to the applicable standard or specification. Defects are not acceptable; discontinuities may, or may not, be acceptable.

It is imperative that the applicable standards establish the level of acceptability of weld discontinuities in order to ensure both dependable and economical structures. For building construction, AWS D1.1 is the primary standard used to establish workmanship requirements. In general, the AWS D1.1 criteria are based on the quality level achievable by a qualified welder, which does not necessarily constitute a lower boundary of suitability for service. If the weld quality necessary for each type of weld and loading condition were specified, widely varying criteria of acceptable workmanship would be required. Moreover, acceptable weld quality (in some cases) would be less rigorous than what would normally be produced by a qualified welder (AWS D1.1, Commentary C6.8). Accordingly, the standards in AWS D1.1 are primarily workmanship standards, not fitness for purpose standards.

This suggests that, in some instances, AWS D1.1 requirements exceed the actual requirements for acceptable performance. The engineer can use a fitness for purpose evaluation to determine alternate acceptance criteria in such situations (AWS D1.1, Provision 6.8). Some specific loading conditions require more stringent acceptance criteria than others. For example, undercut associated with fillet welds would constitute a stress raiser when the fillet weld is loaded in tension perpendicular to its longitudinal axis. However, when the same fillet weld is loaded in horizontal shear, this would not be a stress raiser, and more liberal levels are permitted for the level of undercut.

8.2 TYPES OF WELD DISCONTINUITIES

Weld discontinuities can be broadly grouped into two categories; planar and volumetric. Planar discontinuities include cracks, tears, and regions of incomplete fusion. The heating and cooling associated with welding may reveal various base metal discontinuities, which are typically planar and will be covered with planar weld discontinuities.

Volumetric discontinuities include those found in the weld, as is the case with porosity and slag inclusions, but the same grouping also includes weld discontinuities such as excessive weld concavity. These two types of volumetric discontinuities will be considered separately.

While not typically considered a discontinuity, a deficiency in the expected mechanical properties of a weld is another type of quality problem and will also be addressed separately.

8.2.1 Planar Discontinuities—Weld and Base Metal

Planar discontinuities are essentially two-dimensional imperfections and include all cracks, tears, and fusion-related problems. These are the most serious types of discontinuities because fractures can easily initiate when the weldment is loaded perpendicular to the planar discontinuity. Cracks can occur in the weld, in the heat-affected zone (HAZ), or may be the result of lamellar tearing. These topics are covered extensively in Chapter 5 of this Guide.

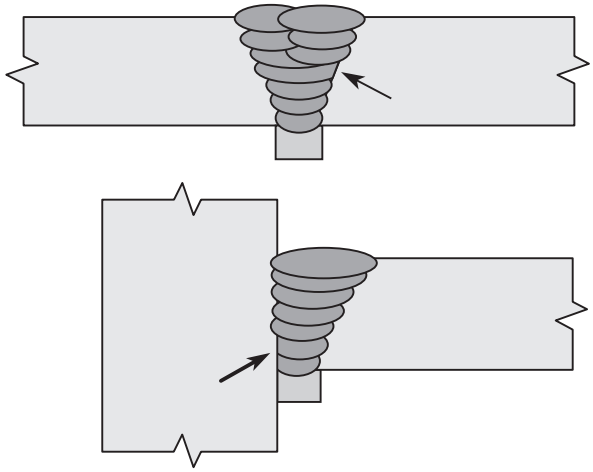

Figure 8–1. Examples of incomplete fusion.

Incomplete Fusion

Incomplete fusion (see Figure 8–1) is the result of the molten weld metal not fusing with the base metal, or with previous deposited weld passes. Incomplete fusion may be called lack-of-fusion, abbreviated as LOF, or called "cold lap." Incomplete fusion may be caused by welding on materials with excessive mill scale. An improperly selected or improperly prepared weld joint detail may inhibit good fusion. Incomplete fusion can occur when the welder is unable to position the electrode properly with respect to the joint, whether due to limited access or poor skill. The most common reason for incomplete fusion, however, is the use of improper welding parameters. GMAW-S is known for the tendency to generate incomplete fusion (see Section 2.6 of this Guide). For other processes, extremes in amperage and travel speed (both high and low) can result in these fusion discontinuities.

Inadequate Joint Penetration

Inadequate joint penetration, also called lack-of-penetration, has various causes. For CJP groove welds like that shown in Figure 8–2, inadequate joint penetration may be the result of improper backgouging of the double-sided joint detail. For joints where a prescribed amount of penetration is specified, inadequate joint penetration may be the result of incorrect electrode placement, an improper welding procedure (typically with low current levels), or an improperly prepared joint.

Overlap

Overlap is a fusion discontinuity that occurs on the surface of a weldment, as shown in Figure 8–3. Overlap may be aggravated by the presence of thick mill scale, but is more often associated with improper procedures or techniques. Slow travel speeds may cause the molten puddle to roll ahead of the arc, resulting in overlap. Often, overlap can be corrected by careful grinding. While shown in a groove weld, overlap can occur in fillet welds as well.

Cracks

Cracking is covered extensively in Chapter 5 of this Guide. While cracks are grouped under the topic of discontinuities, none are acceptable under AWS D1.1, and thus, all cracks are considered defects.

Lamellar Tearing

Lamellar tearing is covered extensively in Chapter 5 of this Guide.

Fins, Scabs, Seams, and Laps

Fins, scabs, seams, and laps are all terms that describe base metal discontinuities located on the surface of the steel. They are typically mill-induced discontinuities. Routine handling during fabrication may cause these surface irregularities to be revealed. Thermal cutting, preheating, and welding may cause such planar discontinuities to open up. Grinding of the surface may reveal imperfections that have been hidden by mill scale. Minor imperfections can be corrected by grinding. Larger base metal discontinuities can be removed and repaired by welding. Limits to the extent to which such repairs can be made are contained in AWS D1.1 Provision 5.15.

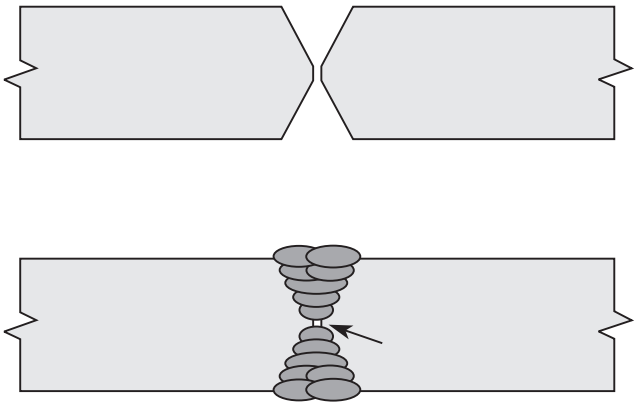

Figure 8–2. Inadequate joint penetration.

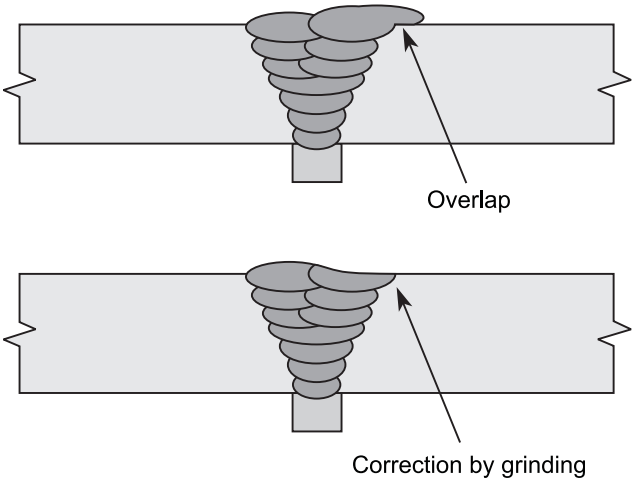

Figure 8–3. Overlap.

Laminations and Delaminations

Laminations and delaminations are planar base metal discontinuities lying parallel to the surface of the steel. The term "lamination" is used when there is essentially no gap between the two surfaces of the planar discontinuity. When the surfaces open up and a gap is formed, the term "delamination" is used. Laminations and delaminations typically occur in the mid-thickness of the steel, whereas lamellar tearing occurs during welding and is located just outside the heat-affected zone, generally within about ¼ in. of the steel surface. Laminations are typically detected when the material is thermally cut.

Laminations are different from the results of lamellar tearing (see Section 5.4 of this Guide). Laminations exist before welding, whereas lamellar tearing is caused by welding.

Plates or shapes that contain laminations and delaminations may be acceptable for service when the discontinuity is parallel to the stress field. Conversely, when the discontinuity is perpendicular to the stress field, the acceptability of the material is more problematic. Materials with laminations and delaminations is often rejected and not used if such problems are discovered before the material is incorporated into a weldment. Unfortunately, such materials are often discovered late in the fabrication sequence, and the suitability of such materials for the application must be evaluated on a case by case basis.

8.2.2 Volumetric Discontinuities—Specific to the Weld

Volumetric discontinuities are three-dimensional imperfections located in and around the weld. Some volumetric discontinuities have rounded or blunted edges that created a less severe stress raiser than the crack-like edges of planar discontinuities. As such, AWS D1.1 permits some volumetric discontinuities to be accepted and left uncorrected. This acceptance depends on the type of weld, type of loading, size, frequency, and spacing of the discontinuities and other factors.

Undercut

Undercut is a small cavity that is melted into the base metal adjacent to the toe of a weld that is not subsequently filled

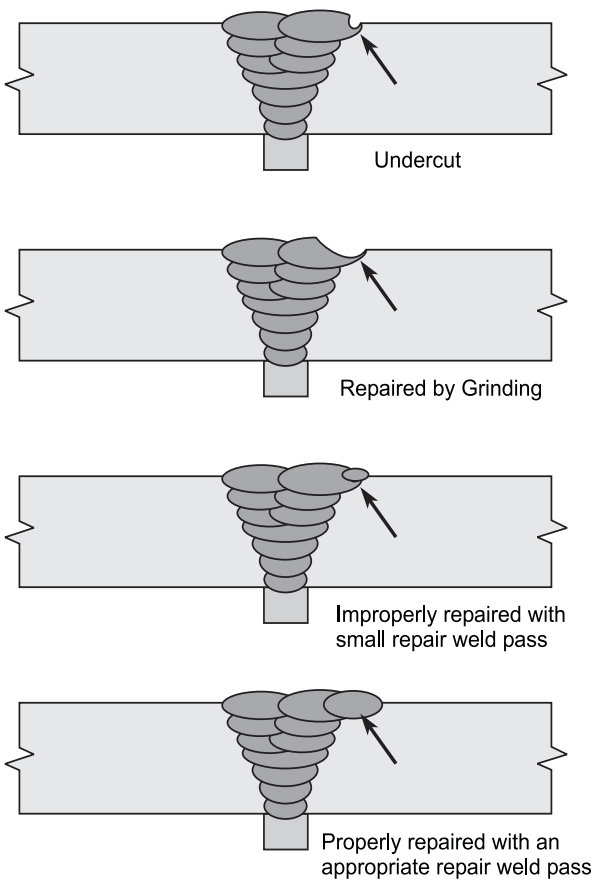

Figure 8–4. Undercut.

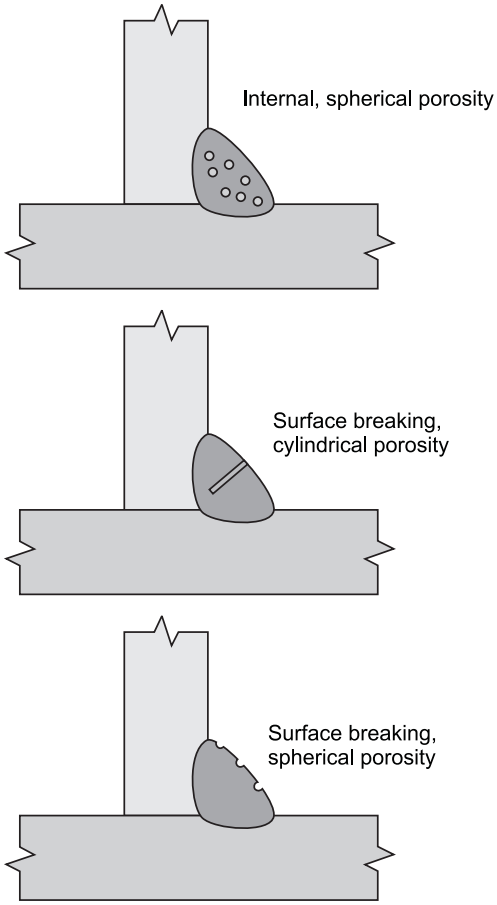

Figure 8–5. Porosity.

by weld metal, as shown in Figure 8–4. Improper electrode placement, high arc voltages, and the use of improper welding consumables may result in undercut. Changes to the welding consumable and welding procedures may alleviate the problem.

Minor undercut may be repaired by careful grinding to reduce any notch-like feature of the undercut. Undercut can be repaired by welding. However, since only a small amount of metal is required, such small, cosmetic weld repairs may do more harm than good. Repairs that involve welding should utilize welding procedures that comply with production welding requirements, including preheat temperatures and adequate welding heat input levels.

AWS D1.1 Table 6.1 provides acceptable limits for undercut, as a function of the length, depth, orientation, and type of loading (static and cyclic).

Porosity

Porosity consists of spherical or cylindrical cavities formed as gases that are dissolved in the liquid weld metal and escape as the metal solidifies. See Figure 8–5. Porosity may be surface breaking or may be internal to the weld. AWS D1.1, Table 6.1 defines acceptable limits for porosity as a function of its type, size, distribution, and type of loading.

Porosity occurs as the result of inadequate shielding of the weld metal or excessive contamination of the weld joint, or both. The products used for shielding weld deposits (gases, slags) must be of appropriate quality, properly stored, and delivered at the correct rate to provide adequate shielding. For SMAW, long arc length can cause porosity. Excessive surface contamination from oil, moisture, rust, or mill scale increases the demand for shielding. Porosity can be minimized by providing proper shielding and ensuring joint cleanliness. To repair welds with excessive porosity, the weld metal that contains the porosity should be removed, and that portion of the weld replaced.

Slag Inclusions

Slag inclusions consist of non-metallic material entrapped in the weld metal or between the weld metal and base metal, as shown in Figure 8-6. Slag inclusions are generally attributed to slag from previous weld passes that was not completely removed before subsequent passes were applied. Slag may be trapped in small cavities or notches, making removal by even conscientious welders difficult. Careful grinding before the application of a subsequent weld pass is effective in eliminating such slag inclusions. Proper joint designs, welding procedures, and welder techniques can minimize slag inclusions. Slag inclusions are typically buried and thus detected only with radiographic or ultrasonic testing. If slag inclusions are excessive, the weld metal surrounding the inclusions must be removed and the weld replaced.

Excessive Concavity

Concavity refers to the profile of the surface of the weld as shown in Figure 8–7. Excessive concavity can lead to centerline cracking (see Section 5.3.1 of this Guide), but cracking is a separate issue from concavity. Excessive concavity is typically caused by the welding procedure or the operator. Lower currents and voltages (where applicable) usually will remedy this problem. The concern with a concave weld is that the throat may be inadequate. Concave weld surfaces with adequate throats are not a problem. Inadequate weld throats created by excessive concavity are easily fixed by simply depositing another weld pass on the concave surface.

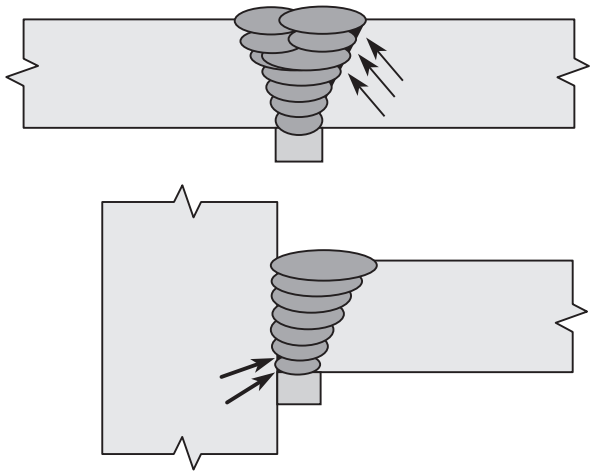

Figure 8–6. Examples of slag inclusions.

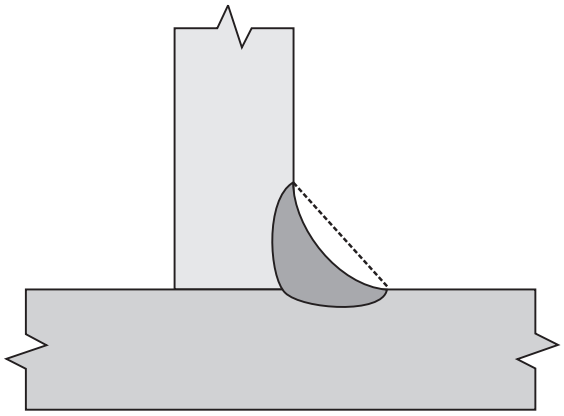

Figure 8–7. Excessive concavity.

Concavity is considered excessive when it exceeds the limits in AWS D1.1 Provision 5.24, or when the required weld throat is not achieved.

Excessive Convexity

Convexity is considered excessive when it exceeds the limits presented in AWS D1.1 Provision 5.24. Excessive convexity is primarily a workmanship issue. As shown in Figure 8–8, excessive convexity wastes weld metal and may increase the stress raiser at the weld toe, if the stress field is perpendicular to the toe. Procedural problems and welder technique are generally responsible for this condition. For welds made with excessive convexity, corrective measures typically involve grinding away the excessive metal. Unfortunately, when excessive convexity is encountered, grinding is often used to eliminate this condition, removing weld metal from the convex face. Yet, the toes may be left unattended. Any stress raiser created at the toe remains, and no improvement is offered when this is the case—see Figure 8–9. If necessary, the toe region should be ground to smoothly transition from the base metal to the weld, and such measures are typically justified only when the structure is subject to cyclic loading.

Inadequate Weld Size

Welds may be too short, or too small, for a given application. Undersized welds are typically workmanship and procedural problems, often resulting from travel speeds that are too high. AWS D1.1 permits welds to be undersized within certain limits, at certain locations (AWS D1.1 Table 6.1). Undersized welds are repaired by depositing additional metal to the undersized weld. The repair weld should be of a size and length that is conducive to good practice.

Underfilled Weld Craters

An underfilled weld crater is a concave depression at the end of the weld, and in this localized area, the weld throat is reduced. Underfilled weld craters are typically due to workmanship or procedural problems. Except for at the ends of intermittent fillet welds, where the required weld length is achieved without a crater, weld craters are expected to be filled. The use of weld tabs permits the termination of the weld on material away from the joint proper, eliminating the problem of underfilled weld craters. However, weld tabs cannot always be used. Underfilled weld craters are like concave welds; centerline cracking can occur during solidification of craters, and the weld throat may be inadequate. Welder technique accounts for most weld crater problems. Underfilled weld craters can be repaired by depositing additional metal in the crater. However, simply applying a localized spot of metal in the crater is likely to do more harm than good. Often, oversized welds can be used to justify leaving underfilled craters in place. Crater cracks should be repaired by grinding out the cracked region and replacing the removed material with sound metal.

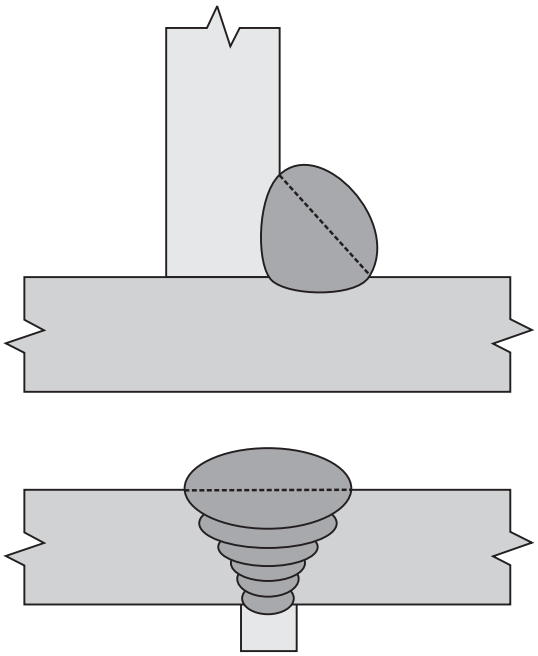

Figure 8–8. Examples of excessive convexity.

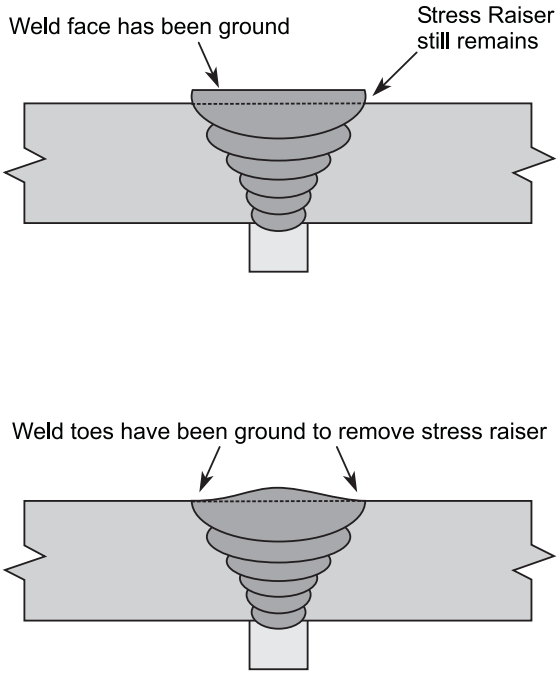

Figure 8–9. Removing excessive convexity.

8.2.3 Volumetric Discontinuities External to the Weld

Spatter

"Spatter" is the term used to describe the roughly spherical particles of molten weld metal that solidify and fuse to the base metal outside the weld joint. Spatter is generally not considered to be harmful to the performance of welded connections. However, excessive spatter may inhibit proper ultrasonic inspection, may be aesthetically unacceptable for exposed steel applications, and may affect coating systems. Excessive spatter is indicative of less than optimum welding conditions and suggests that the welding consumables and/or welding procedures may need to be adjusted.

Loose spatter is easily removed by scraping, while more tightly adhering spatter can be chiseled or ground off. AWS D1.1 has no acceptance limit for spatter except that it cannot interfere with NDT (AWS D1.1 Provision 5.30).

Arc Strikes

Arc strikes consist of small, localized regions of metal that have been melted by the inadvertent arcing between electrically charged elements of the welding circuit and the base metal. Welding arcs that are initiated outside the joint leave behind these arc strikes. Arcing of work clamps to the base metal can cause arc strikes, as can welding cables with damaged insulation. SMAW is particularly susceptible to creating arc strikes, since the electrode holder is electrically "hot" when not welding. Welding leads should be insulated and in good condition. Proper welding practices minimize arc strikes.

AWS D1.1 Provision 5.29 states that arc strikes should be avoided, and should arc strikes cause cracks or blemishes, they are to be ground to a smooth and checked to ensure soundness. Grinding away the affected metal will eliminate any potential harm from arc strikes. This includes the melted metal, as well as any hardened HAZ.

8.2.4 Metallurgical Deficiencies

All of the discontinuities discussed above are detectable characteristics, although some can be identified only with destructive or nondestructive testing. This final topic of discussion on weld quality deals with the properties of the deposited weld metal. The mechanical properties of deposited welds, and to a lesser extent the chemistry of such welds, are critical to the performance of welded connections. Unfortunately, there are no practical ways to directly verify that the required properties have been achieved. However, by identifying and controlling variables that affect the properties of deposited welds, the process by which the weld is made can be controlled, and in turn, the weld properties controlled.

The mechanical properties of a weld basically depend on the chemistry of the weld deposit, the rate of cooling experienced by the weld, and any subsequent thermal treatment the weld receives. The chemistry of the weld depends on two primary elements: welding on material of a known composition, and using the proper filler metals. Cooling rates depend on the amount of thermal energy introduced into the joint (preheat temperature, heat input, etc.) and how much material is available to conduct the energy away (material thicknesses and configurations). While there are many factors involved, these factors can all be monitored and controlled easily.

Controlling the welding process is the primary means employed by AWS D1.1 to ensure weld quality, not only in terms of weld soundness (which can be evaluated nondestructively) but, most importantly, in terms of the mechanical properties of the weld as well.

9. Weld Inspection

9.1 INTRODUCTION

Welds are inspected to ensure that they comply with the requirements of a given specification. Weld inspection fits into two broad categories: destructive and nondestructive. Destructive testing typically involves machining test specimens out of a weldment, applying a force, and measuring the response of the test specimen to the force. The weldment is no longer useful for the intended service. Destructive testing is applied to welding procedure qualification test plates and may include tensile testing, Charpy impact testing, and bend tests.

Nondestructive testing (NDT), which may also be called nondestructive examination (NDE), can be used to inspect an in-situ weld without destroying the weldment. Many such methods exist, but for structural steel inspection, only a few are commonly used, and these will be discussed in this chapter.

Visual inspection is logically included in this chapter on weld inspection and while this method is clearly not destructive, it is generally not included in the category of nondestructive.

9.2 VISUAL INSPECTION (VT)

Visual inspection is the most powerful tool that can be employed to ensure weld quality. The more technologically sophisticated nondestructive processes, such as ultrasonic or radiographic inspection, can only determine whether or not the specified quality is present once welding is complete. In contrast, since effective visual inspection examines each step of the welding process well before the weld is completed, it can be used to mitigate or avoid situations that could cause weld quality problems. VT is the only inspection method that, in and of itself, can actually improve the quality of a given weld. For example, visual inspection of the weld joint preparation and the adequacy of the root opening dimension can ensure that conditions conducive to obtaining good fusion are present before welding begins, minimizing the probability of incomplete fusion in the completed weld.

Everyone involved in a welding project, including the welders, inspectors, foremen, etc., can and should participate in in-process visual inspection. Minor discontinuities can be detected and corrected during the fabrication process, precluding the need for more expensive and complicated repair after the fabrication is complete. In order to be effective, visual inspection must take place prior to, during, and after welding. VT requires good eyesight and good lighting. Frequently, good lighting is scarce in a fabrication shop or even in certain parts of a construction site, so a simple flashlight can be a valuable aid to visual inspection.

AWS D1.1 includes a variety of in-process inspection tasks that are to be performed on all projects. These tasks can be divided into three groups: inspections that take place before welding, during welding, and after welding.

All welds are to be visually inspected (AWS D1.1 Provision 6.9). This visual inspection is required even when nondestructive testing is to be performed.

9.2.1 Visual Inspection Before Welding

Inspection tasks that should take place before welding include the following:

1. Review drawings and specifications.
2. Check qualifications of welding procedures (that are qualified by test).
3. Check prequalified WPS to ensure compliance with re quirements.
4. Check qualifications of personnel to be utilized.
5. Review materials to be utilized (steels, filler metals, shielding materials).
6. Inspect equipment to be used.
7. Check for base metal discontinuities.
8. Check fitup and alignment of welded joints.
9. Check preheat, if required.
10. Check welding conditions (ambient temperature, wind, etc.).
11. Set up a system for recording results.

9.2.2 Visual Inspection During Welding

Inspection tasks that should take place during welding include the following:

1. Verify quality of weld root bead.
2. Check joint root preparation prior to welding the second side.
3. Check interpass temperatures.
4. Inspect sequence of welding passes.
5. Inspect each weld layer for apparent weld quality.
6. Inspect cleaning between passes.
7. Check for conformance with the applicable procedure.

9.2.3 Visual Inspection After Welding

Inspection tasks that should take place after welding include the following:

1. Inspect final weld appearance (porosity, undercut, cracks, etc.).
2. Inspect final weld size.
3. Inspect weld length.
4. Confirm the presence of all required welds.
5. Verify the absence of unauthorized welds.
6. Check for excessive distortion.

9.3 NONDESTRUCTIVE TESTING—GENERAL

Nondestructive testing (NDT) is an important element of many quality programs. It cannot, however, replace in-process visual inspection. Before NDT is performed, AWS D1.1 requires that the welds first meet visual acceptance criteria (AWS D1.1, Provision 6.11).

Because of the diversity of projects that can be governed by AWS D1.1, it is impossible for a single document to specify appropriate inspection requirements, including the extent and type of NDT to be performed, acceptance criteria, and who is responsible for various inspection tasks. AWS D1.1, therefore, relies on the engineer to specify such NDT requirements. With a few exceptions, when no NDT is specified only visual inspection will be required by AWS D1.1 and the AISC Specification. Therefore, it is critical that any NDT requirements be established in advance of fabrication, under the direction of the engineer. It is the engineer's responsibility to determine whether verification inspection will be utilized or whether reliance upon fabricator/erector inspection will be sufficient. It is important that everybody on the project, including the various inspectors, welding supervisors, and the welders themselves, understand what is expected of them before construction begins.

There are a variety of NDT methods available to inspect welds, each with advantages and limitations. Discussed below are the four methods most commonly used, along with visual inspection, to inspect structural steel welds.

9.4 PENETRANT TESTING (PT)

Liquid penetrant testing, also known as dye penetrant testing, involves the application of a liquid which, by a capillary action, is drawn into a surface-breaking discontinuity, such as a crack or porosity (see Figure 9–1). When the excess residual dye is carefully removed from the surface, a developer is applied to absorb the penetrant that is contained within the discontinuity. This results in a stain in the developer showing that a discontinuity is present.

Conceptually, PT is simple, but in application, it is frequently misapplied. The materials being inspected must be clean. Adequate time, typically around 15 minutes, must be allowed for the liquid to be carried by capillary action into the discontinuity. Excessive liquid must then be carefully removed. Failure to remove dye from the surface will cause irrelevant indications. If the surface is flushed with cleaner, however, the dye can be washed from the cavity. Therefore, only wiping of the surface is permitted. Finally, if the developer is applied but an insufficient length of time elapses before inspection, the dye may not stain the developer.

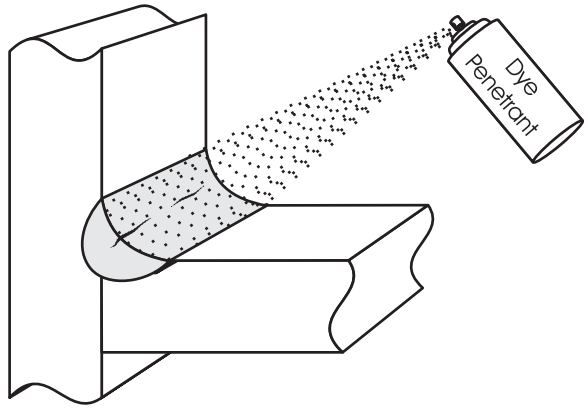

Figure 9–1. Penetrant testing.

With respect to weld testing, a common mistake is to apply the dye when the part is still hot. This can cause the dye to boil or burn, and either not penetrate the discontinuity, or "dry out," yielding unreliable results.

Dye penetrant testing is effective for detecting only surface-breaking discontinuities. It has no ability to reveal subsurface discontinuities, but it is highly effective in accenting discontinuities that may be too small to detect with visual inspection alone. PT can be messy and slow. Because of these disadvantages and the fact that penetrant inspection is limited to surface-breaking discontinuities, and since these discontinuities can also be observed with magnetic particle inspection, PT is not commonly used for steel applications. PT is most often used to inspect nonmagnetic materials such as aluminum or austenitic stainless steel.

9.5 MAGNETIC PARTICLE INSPECTION (MT)

Magnetic particle inspection utilizes the change in magnetic flux that occurs when a magnetic field is present in the vicinity of a discontinuity (see Figure 9–2). When magnetic powders are dusted on the part, the change in magnetic flux density will create a different pattern where a discontinuity exists. The process is effective in locating discontinuities that are on the surface and slightly subsurface. For steel structures, magnetic particle inspection is generally preferred over penetrant inspection, as it is faster, less messy, can be performed on hot weldments, and can detect some subsurface discontinuities. Magnetic particle inspection can reveal cracks, incomplete fusion, slag inclusions, and porosity, but all must be surface-breaking (or very near the surface).

Permanent magnets can be used for MT to induce the magnetic field, but it is more common to create electromagnetic fields with electrical power. Two methods are common:

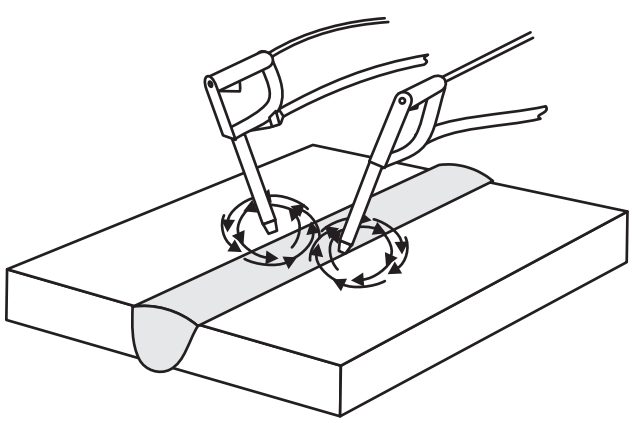

Figure 9–2. Magnetic particle inspection.

Current is either directly passed through the material, or a magnetic field is induced through a coil on a yoke. With the first method, electrical current is passed through two prods that are placed in contact with the surface. When the prods are initially placed on the material, no current is applied. After intimate contact is ensured, current is passed through. Small arcs may occur between the prods and the base material, resulting in an arc strike, which may create a localized brittle zone. It is important that the prods be kept in good shape and that intimate contact with the work is maintained before the current is passed through the prods. Depending on the geometry of the part, two people are often needed to perform MT with the prod method—one to hold the prods (one in each hand) and the other to apply the metallic powder.

The second method of magnetic field generation is through induction. In what is known as the yoke method, an electrical coil is wrapped around a core, often with articulated ends. Electrical current is passed through the coil, creating a magnetic field in the core. When the ends of the yoke are placed in contact with the part being inspected, the magnetic field is induced into the part. Since current is not passed into the part, the potential for arc strikes is eliminated. Along with this significant advantage comes a disadvantage; the yoke method is not as sensitive to subsurface discontinuities as the prod method. However, since MT is typically used to detect surface-breaking discontinuities, and since the prod method can create undesirable arc strikes, the yoke method is the most popular.

Cracks are most easily detected when they lie perpendicular to the magnetic field. With the prod method, the magnetic field is generated perpendicular to the direction of current flow. For the yoke method, the opposite applies. Magnetic particle inspection is most effective when the region is inspected twice: once with the field located parallel to the weld axis and once with the field perpendicular to the weld axis.

While magnetic particle inspection can detect some subsurface discontinuities, it is best viewed as an enhancer of visual inspection. MT is not routinely used as an NDT method for inspecting structural steel welds, but is often used when visual inspection or other forms of NDT detect defects that need to be repaired. For example, MT may be used to ascertain the extent of cracking; part of the crack may be obvious, but the full extent of cracking may not be so apparent. MT can be used to determine the length or the depth of the crack. After the repairs are completed, MT is often used to ensure the quality of the repaired weld, particularly when the weld involved is a PJP groove weld or fillet weld.

MT is highly sensitive, and powder routinely collects along defect-free weld toes, for example, yielding irrelevant indications. Yet this is also the location where lamellar tearing or heat-affected zone cracking may occur. When disputes over the significance of an indication arise, careful selective grinding can eliminate the naturally occurring geometric change and the part can be reinspected.

A distinct advantage of MT over PT is the speed with which MT can be performed. Further, MT can be performed while the part is warm. This is particularly helpful when MT is used to determine the extent of cracking. The crack can be removed by grinding or air arc gouging and immediately inspected with MT to see if the full crack has been removed.

MT is used for inspection of weld access holes in heavy plate or shapes when required by AISC Specification. While either PT or MT is permitted, MT is typically preferred as it is quicker, simpler, and requires less cleanup afterwards.

9.6 RADIOGRAPHIC INSPECTION (RT)

Radiographic inspection uses X rays or gamma rays that are passed through the weld and expose a radiographic film on the opposite side of the joint (see Figure 9–3). X rays are produced by high-voltage generators, while gamma rays are produced by atomic disintegration of radioactive isotopes.

Whenever radiography is used, precautions must be taken to protect workers from exposure to excessive radiation. Safety measures dictated by the Occupational Safety and Health Administration (OSHA), the National Electrical Manufacturer's Association (NEMA), the Nuclear Regulatory Commission (NRC), the American Society of Nondestructive Testing (ASNT), and other agencies should be carefully followed when radiographic inspection is conducted.

Radiographic testing relies on the ability of the material to allow some of the radiation to pass through, while absorbing part of this energy within the material. Different materials have different absorption rates. Thin materials will absorb less radiation than thick materials. The higher the density of the material, the greater is the absorption rate. As different levels of radiation are passed through the materials, portions of the film are exposed to a greater or lesser degree than the rest.

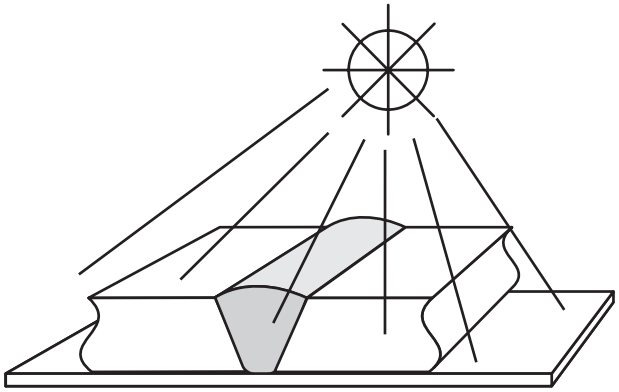

Figure 9–3. Radiographic inspection.

Since the source of radiation must be on one side of the part, and the film on the other, access to both sides of the joint is required for RT.

When the film is developed, the resulting radiograph will bear the image of the plan view of the part, including its internal structure. A radiograph is actually a film negative in which the darkest regions are those that were most exposed, since the material being inspected absorbed the least amount of radiation. Thin parts will be darkest on the radiograph. Porosity will be revealed as small, dark, round circles. Slag is also generally dark, and may look similar to porosity, but will be irregular in its shape. Cracks that lie parallel to the source of radiation appear as dark lines. Incomplete fusion and underfill will show up as darker areas. Weld reinforcement will result in a lighter region.

Radiographic testing is most effective for detecting volumetric discontinuities such as slag and porosity. When cracks are oriented perpendicular to the direction of the radiation source (e.g., parallel to the film), they may be missed with the RT method. Cracks that are parallel to the radiation path are the most detectable, although tight cracks have gone undetected by RT at times.

Radiographic testing has the advantage of generating a permanent record for future reference. With a "picture" to look at, many people are more confident that the interpretation of weld quality is meaningful. However, reading a radiograph and interpreting the results requires stringent training, so the effectiveness of radiographic inspection depends to a great degree on the skill of the technician.

Radiographic testing is ideally suited for inspection of complete joint penetration (CJP) groove welds in butt joints. It is not suitable for inspection of partial joint penetration (PJP) groove welds or fillet welds. When applied to T- and corner joints, the geometric constraints of the applications make RT inspection difficult, and interpretation of the results is highly debatable.

9.7 ULTRASONIC INSPECTION (UT)

Ultrasonic inspection relies on the transmission of high frequency sound waves through materials (see Figure 9–4). Solid, discontinuity-free materials will transmit the sound throughout a part uninterrupted. A receiver "hears" the sound reflected off of the back surface of the part being inspected. If a discontinuity is contained between the transmitter and the backside of the part, an intermediate signal will be sent to the receiver, indicating the presence of this discontinuity. The pulses are read on a display screen.

The magnitude of the signal received from the discontinuity is proportional to the amount of reflected sound. This

is indirectly related to the size, type, and orientation of the reflecting surface. The relationship of the signal with respect to the back wall will indicate its location. Ultrasonic inspection is sensitive enough to detect small discontinuities that are not relevant to the performance of the weld.

UT is most sensitive to planar discontinuities, such as cracks, laminations, and planes of incomplete fusion that lie perpendicular to the sound path. Under some conditions, uniformly cylindrical or spherical discontinuities can be overlooked with UT.

Ultrasonic inspection is ideal for inspection of CJP groove welds in butt, corner, and T-joints. While UT inspection of PJP groove welds is possible, interpretation of the results can be difficult. Except with very specialized techniques, UT is not suitable for inspecting fillet welds.

A common problem in UT inspection involves T- and corner joints. When CJP groove welds are made from one side and with steel backing attached, the interpretation of results near the root is problematic at best. It is difficult to clearly distinguish between the naturally occurring regions where the backing contacts the adjacent vertical T- or corner joint member and an unacceptable incomplete fusion. There is always a signal generated from this area. Of course, this is the situation encountered when steel backing is left in place on a beam-to-column moment connection. To minimize this problem, the steel backing can be removed, offering two advantages: First, the influence of the backing is obviously eliminated; and secondly, in the process of backing removal, the joint can be backgouged and the root visually inspected prior to the application of the back weld and the reinforcing fillet weld.

It is also important to note that when a bottom beam-to-column connection is inspected, it is impossible for the operator to scan across the entire width of the beam flange because of the presence of the beam web. This leaves a region in the center of the weld that cannot be UT inspected. Unfortunately, this is also the region where it is most difficult for the welder to deposit sound weld metal, and it has been identified as the location of many weld defects. When the beam is joined to a wide flange column, this is also the most severely loaded portion of the weld. Backing removal and subsequent backgouging operations help to overcome this UT limitation since they enable visual verification of weld soundness.

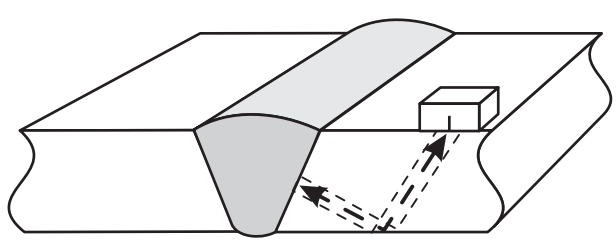

Figure 9–4. Ultrasonic inspection.

10. Seismic Welding Issues

10.1 INTRODUCTION

In high-seismic applications (when the seismic response modification factor R is taken greater than 3), the requirements in the building code differ from other loading conditions in that it is assumed that portions of the building's seismic load resisting system (SLRS) will undergo controlled inelastic response when subjected to major seismic events. Welds and welded connections that are part of the SLRS connect members that are subject to yield-level stresses and plastic deformations during such events. In order to resist the imposed loads, welded connections must be designed, detailed, fabricated, and inspected to more rigorous standards than are required for statically loaded buildings. The weld metal property requirements are also different. This chapter of the Guide provides a general overview of typical requirements but is not intended to be a comprehensive summary of all the provisions of various seismic standards, nor should it be used as a replacement for these other documents. As is the case elsewhere this Guide, the chapter is primarily devoted to welding-related provisions.

High-seismic framing systems generally have the highest demands concentrated at the ends of beams and braces, right near the point of the connections. Thus, connections are often in or near the most severely stressed portions of a structure. Inelastic deformations are not typically expected to be concentrated in the welds themselves, but welds are often near the base metal in which such strains are located. In order for the expected inelastic deformations to occur, the welded connections must be strong enough to resist the applied stresses without fracture, and the base metal must be capable of deforming to accommodate the straining.

The welded connections in high-seismic applications must be strong, ductile, and fracture resistant. Strength and ductility are primarily addressed through the selection of the welding filler metals and control of the procedures used to deposit the metal. Such criteria are not significantly different than the requirements for low-seismic applications. In high-seismic applications, because of the potential consequences of connection fracture, as well as the demands placed on the connections, the welded connections are treated differently with respect to fracture resistance.

Three factors determine the ability of a connection to resist brittle fracture: the applied stresses; the presence (or lack) of cracks, notches, and other stress concentrations; and the fracture toughness of the material. The applied stresses in the connection are inherently linked to the configuration of the connection. In general terms, two approaches have been used in seismic design to reduce the applied stresses in the connection: the connection can be strengthened (by the use of reinforcing ribs, gussets, coverplates, etc.), or the demand on the connection can be reduced (such as through the used of reduced beam sections, often called "dogbones"). These factors are not directly weld related but have a direct effect on the localized stresses in the weld and ductility demands on the weld.

The other two factors (stress concentrations and material fracture toughness) are specifically welding related. The first variable consists of two different issues: cracks and stress concentrations. For connection fracture resistance, welds and heat-affected zones must be free of cracks and crack-like discontinuities; that is, planar and near-planar flaws. To avoid cracks, specifications like the AWS D1.8 *Structural Welding Code—Seismic Supplement* emphasize hydrogen control. The AISC Seismic Provisions call for specific post-welding nondestructive testing (NDT) to detect any cracking that might have occurred during or after welding. Lamellar tearing can be similarly detected. Incomplete fusion, some slag inclusions, and planar discontinuities, may have a crack-like effect on fracture resistance. Good welding procedures and welder workmanship limit the production of such discontinuities, and effective NDT is used to detect remaining planar flaws.

Stress concentrations occur in a variety of forms, including notches and gouges from flame cutting, weld toes, left-in-place weld tabs, and weld discontinuities such as undercut, underfill, and porosity. These stress concentrations are generally not planar, but volumetric and, as such, are typically less severe than cracks. However, depending on the exact geometry of the discontinuity, the local stress levels, and the orientation of the stress concentration to the stress field, the effect can range from inconsequential to severe. The AISC Seismic Provisions and the AISC Prequalified Connection Standard, as well as AWS D1.8, prescribe limits for such stress concentrations in the connections of structures subject to seismic loading.

Steel backing left in-place in T-joints of moment connections can create a crack-like planar discontinuity that constitutes a major stress concentration. Illustrated in Figure 10–1 and discussed in Section 10.4 below, the stress concentration is created by the naturally occurring lack-of-fusion plane between the vertical edge of the steel backing and the

column flange. Additionally, this is a likely site of various welding discontinuities, such as incomplete fusion and slag inclusions. A majority of the fractures that occurred during the Northridge earthquake of 1994 initiated in this region, as this was the predominant severe discontinuity in the pre-Northridge moment connection detail.

In addition to the stress level and the presence of cracks and stress raisers, the fracture toughness of the materials involved affects the fracture resistance of the connection. The materials of interest include the base metal, weld metal, and the heat-affected zone. Tests performed on base metals suggest that commercially supplied rolled shapes routinely exhibit sufficient fracture toughness to avoid the specification of special requirements (Frank, 1997), except for heavier rolled shapes and thicker plates. Similarly, when welding heat input is constrained within normal fabrication limits, no special controls have been found necessary for HAZ fracture toughness control (Johnson, 1997). For weld metal, fracture toughness requirements (in the form of minimum CVN toughness values) have been developed, and specifics are discussed below (Barsom, 2003).

10.2 SPECIFICATIONS AND CODES

Specific requirements for buildings subject to high-seismic loading (applications involving $R > 3$) are given in the AISC Seismic Provisions, which contain some welding-related requirements. AWS D1.8 contains a variety of requirements that augment those contained in AWS D1.1. Finally, the AISC Prequalified Connection Standard includes some welding-related provisions, particularly in terms of acceptable connection details.

The AISC Seismic Provisions have been substantially modified as a result of the lessons learned from the 1994 Northridge earthquake. Because of the unexpected behavior of some of the buildings affected by that event, FEMA funded what became known as the SAC Joint Venture Project. Those investigations culminated in a variety of publications, including FEMA 350, 351, 352, and 353. Many of the recommendations from those publications were incorporated into the AISC Seismic Provisions and AWS D1.8.

The primary welding specification to address welding-related requirements in high-seismic applications is AWS D1.8. This consensus document has incorporated many of the recommendations of FEMA 350 through 353. An extensive commentary is part of AWS D1.8, explaining the rationale behind the provisions. Today, there is no need to reference the FEMA documents to control welding-related issues steel construction projects.

10.3 SEISMIC WELDING TERMINOLOGY

Connections in the SLRS that are subject to such severe loading conditions and those joints whose failure would result in significant degradation in the strength and stiffness of the SLRS have been identified in the AISC and AWS standards as "demand critical." Welds in demand-critical connections are called "demand-critical welds" and are subject to additional detailing provisions, material requirements, workmanship and fabrication standards, and inspection provisions.

The material in the area wherein plastic hinges are intended to form must be relatively smooth and free of notches, gouges, tack welds, shear studs and other geometric changes that might concentrate stress or inhibit ductile behavior. To ensure that ductility is not impaired in this region by inadvertent attachments, for example, the term "protected zone" has been created and defined. In this region, restrictions on attachments and fabrication practices apply. The AISC Seismic Provisions and AISC Prequalified Connection Standard define the region, and AWS D1.8 further specifies operations that are prohibited in this zone.

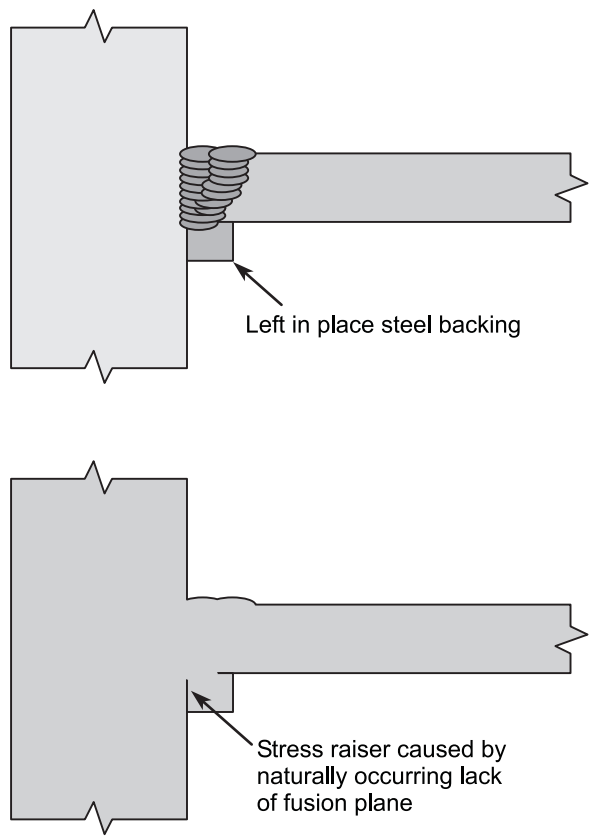

Figure 10–1. Notch effect created by steel backing.

10.4 SPECIAL CONNECTION DETAILS

High-seismic loading often imposes the most severe stresses in or near the structural connections, and such connection details may require special consideration. In-depth discussion of these connections and the details associated with them is beyond the scope of this Guide, and the reader is directed toward applicable documents for such information, such as the AISC Prequalified Connection Standard. However, general welding-related issues applicable to various connection details are discussed below. Specific treatments of these various detail issues are addressed in the AISC Seismic Provisions and AWS D1.8.

In Section 3.3 of this Guide, various CJP groove weld details are discussed in a general manner (e.g., for low-seismic applications). The following are additional factors to be considered for high-seismic construction.

Steel Weld Backing

Steel backing may create notch effects in the weld root, depending on the joint type and loading conditions (see Figure 10–1). When used in tee joints typical of beam-to-column connections in moment frame buildings, and particularly for the bottom beam flange connection, lateral forces will cause bending moments, which impose tensile stresses on these connections. The notch-like condition created by the left-in-place backing in T-joints can serve as a stress concentrator and crack initiator.

To eliminate this condition, the steel backing can be removed, the root of the weld gouged to sound metal, and a reinforcing fillet weld applied (see Figure 10–2). This is an expensive operation that is typically applied only to the bottom beam-flange to column-flange connection in special moment resisting frames.

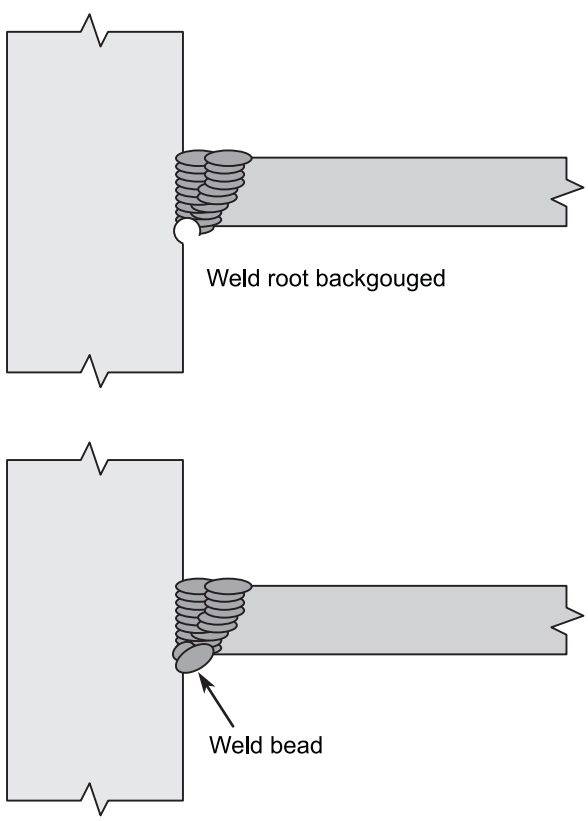

Figure 10–2. Steel backing removal.

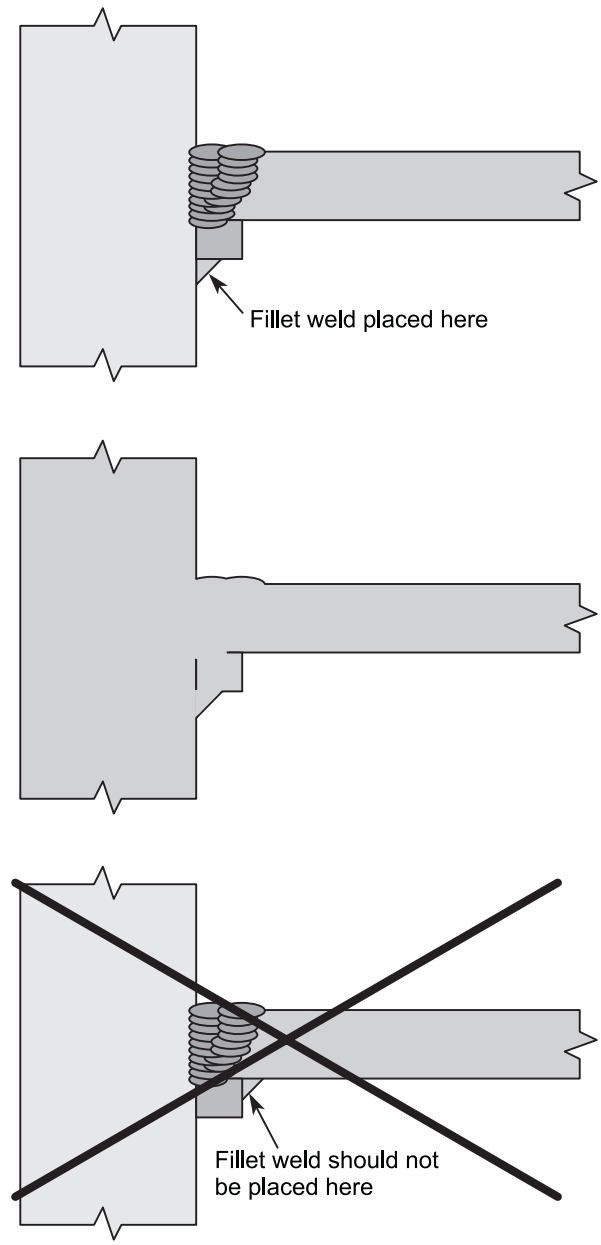

Figure 10–3. Backing treatment for top flanges.

For top beam-flange to column-flange welds, a simple reinforcing fillet weld, added between the backing and column, sufficiently reduces the stress concentration, so as to permit steel backing to remain in place (see Figure 10–3). Welds should not be placed between the backing and the beam flange, as such connections actually increase the amount of stress transferred into the backing and increase the notch effect of the unfused backing.

While left-in-place backing on connections, such as that described above, create undesirable stress concentrations, this is not automatically the case whenever and wherever backing is left in place. In a butt joint, for example, the unfused region between the base metal and the backing lies parallel to the direction of loading and does not constitute the same type of stress concentration as previously discussed (see Figure 10–4). Accordingly, steel backing may be left in place in certain locations on members in the SLRS.

The AISC Prequalified Connection Standard and the AISC Seismic Provisions delineate where steel backing may and may not remain in place. AWS D1.8 does not specify where backing removal is required, but rather requires the engineer to stipulate this type of treatment.

Weld Access Holes

In moment frames in high-seismic applications, the distribution of stresses through the end of a beam into the connection is affected by the size and the nature of the weld access hole. The AISC Prequalified Connection Standard has special requirements for weld access hole geometries in some situations. In addition, weld access holes are required to be fabricated free of unacceptable notches and gouges that may serve as stress concentrators. Specific workmanship standards for weld access holes are given in AWS D1.8.

Weld Tabs

Weld tabs are normally left in place for building construction, but for buildings subject to high-seismic loading, weld tab removal may be required. The portions of a weld that are located on tabs are typically not inspected and may contain a host of discontinuities. Removing the weld tabs after the weld has solidified and cooled eliminates any potential harmful effects such discontinuities may have on connection behavior. Removal is even more important in situations where stresses are attracted toward the weld tabs, such as when wide-flange shapes are used for beams and are connected to box columns.

10.5 FILLER METAL REQUIREMENTS

For demand-critical welds, the deposited weld metal is required to demonstrate a minimum Charpy V-notch (CVN) toughness of 40 ft-lb at +70 °F, and additionally, show 20 ft-lb at 0 °F or –20 °F, depending on the standard. These criteria were developed based on loading conditions, connection details, workmanship standards, and inspection requirements (Barsom, 2003). The lower temperature acceptance criterion is based on the AWS A5 filler metal classification tests. The +70 °F CVN toughness must be demonstrated on two test plates, one welded with the highest heat input to be used in fabrication or erection, and one welded with the lowest heat input. The high heat input test replicates slow cooling conditions, while the low heat input generates high cooling rates. For CVN toughness, optimal results are obtained with a moderate cooling rate, and values decrease as cooling rates both increase and decrease as compared to the moderate rate.

These criteria are applicable to structures with enclosed structural elements, assumed to be maintained at a temperature above +50 °F, despite external ambient conditions. For situations where this is not the case, alternate criteria must be employed, requiring testing of welds at lower temperatures.

The required weld metal fracture toughness was based on connection details that were free of large crack-like discontinuities such as those created by left-in-place steel backing, fabrication induced cracks, and workmanship defects. High toughness values will not ensure adequate structural performance when stresses are too high, when members are highly constrained, or when severe geometric stress raisers exist (Barsom, 2003). The CVN toughness criteria outlined above, and as contained in the AISC and AWS standards, presume that other portions of these standards are being applied to the design, detailing, fabrication, and inspection of connections.

As was discussed in Chapter 2 of this Guide, when FCAW-S weld deposits are mixed with weld metal deposited by other processes, Charpy V-notch impact toughness values may deteriorate. To ensure that the composite weld metal has acceptable CVN toughness levels, specific testing criteria are

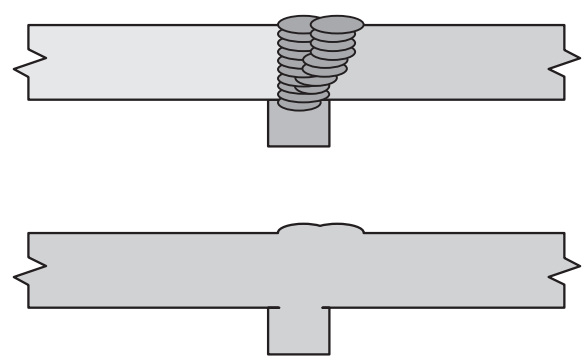

Figure 10–4. Butt joints and backing.

contained in various seismic standards. The testing involves a single test plate that is welded with both processes, with CVN specimens that are extracted in the region of maximum interaction.

10.6 WELDER QUALIFICATION TESTS

When joining wide-flange beams to columns with groove welds, typically the welder makes the bottom-flange weld by welding through a weld-access hole. This difficult welding situation requires that welds be interrupted along their length since the web precludes a full-length weld pass. Thus, a series of weld pass starts and stops will be contained near the mid-length of the weld, under the web.

To ensure that welders are capable of making such welds, specific welder qualification tests are contained in AWS D1.8, generally replicating the geometry of bottom beam-to-column connections, and specifically designed to test the integrity of the weld in the region of the simulated web. The welder is required to weld through a minimum sized weld-access hole, using the maximum welding deposition rate and the type of backing that will be used on the actual application (including the option of using no backing). The test simulates a T-joint, and restricts access similar to actual bottom beam flange-to-column flange connections. Requiring welders to demonstrate their skills on such connection mock-ups helps to ensure that workmanship on the final structure will meet the special demands of welding on structures subject to seismic loading.

10.7 NONDESTRUCTIVE TESTING

Nondestructive testing (NDT) of the completed connection serves as a final validation that the required weld integrity has been achieved. As discussed in Chapter 9 of this Guide, there are a variety of NDT processes, each with unique capabilities and limitations. The project quality assurance plan (QAP) specifies the details of NDT. Included are the definitions of who performs what testing, by what process, and the applicable acceptance criteria. AWS D1.8 details the NDT technician qualifications, testing protocols, and other inspection techniques. However, unless NDT is specified, AWS D1.8 and D1.1 require only visual inspection.

11. Fatigue Considerations

11.1 INTRODUCTION

Fatigue is the process of cumulative damage caused by repeated fluctuating loads. Such damage occurs at regions of stress or strain concentrations that cause the localized stress to exceed the yield stress of the material (Barsom and Rolfe, 1999).

Most buildings and building components are not subject to cyclic loading that would generate fatigue concerns. The AISC Specification states that until the number of applications of live load exceeds 20,000, no evaluation of fatigue resistance is required. While earthquake loading is cyclic, such loading consists of a relatively limited number of high-stress-range cycles. This type of cyclic loading is different from the fatigue coverage of this chapter, which deals with low-stress-range, high-cycle applications. Thus, fatigue applications for traditional building structures are typically limited to situations such as crane runways and their supports, and supports for machinery such as punch presses that impose cyclic loads.

A variety of design methodologies can and have been used to design structures subject to cyclic loading. The method most commonly applied to structures, and that which has been incorporated into the AISC Specification, originated with the American Association of State Highway Transportation Officials (AASHTO) and was developed for bridge design. It is empirically based and relies on laboratory fatigue testing that was performed on large-sized members that replicated bridge components. This is the method is discussed in this chapter.

When buildings or building components are expected to be subjected to 20,000 or more cycles of live load, fatigue should be considered. Fatigue provisions are contained in Appendix 3 of the AISC Specification. The three key variables involved in the design of members subject to such loading are (a) stress range, (b) the geometry of the connection, and (c) the number of load cycles. As the function of the structure and its life expectancy will dictate the number of load cycles the product is expected to resist, the engineer must address the first two of these variables, which are discussed below.

One advantage of the AASHTO method is that stresses are determined in the conventional manner, and there is no need to assign any stress concentration factor to the computed stresses. Rather, based on statistically reliable experimental data, the actual stress concentrations are considered by identifying geometric details of connections that are the same as or similar to those that were experimentally evaluated.

11.2 STRESS RANGE

The most important variable used in predicting the life of a specific component of a given geometry subject to cyclic loading is the stress range, defined as the maximum stress minus the minimum stress. Such stresses may result from applied tension, bending, or torsion, and the stresses are computed in the same manner as in the case of static loads. For applications involving cyclic loading, the stresses are first calculated with the dead load only. Next, the stresses due to the live (cyclic) loads are determined. Finally, the stresses for the two loading conditions are combined. The difference between the maximum total stress and the minimum total stress is the stress range.

The stress range, not the maximum stress, is the best predictor of fatigue behavior for welded assemblies. As will be shown below, the applied stress may be compressive or tensile, and the behavior of the welded component in terms of fatigue crack initiation will be the same, provided that the stress range is the same. This behavior is a result of the residual tensile stresses that are inherent to as-welded assemblies. In and around the weld, there are residual tensile stresses that are at or near the yield stress of the material.

To illustrate, assume a 50 ksi yield strength steel is used. After welding, residual tensile stresses of 50 ksi can be assumed. Two loading conditions will be considered. In the first, a cyclic tensile load from 0 to 10 ksi is applied. In and around the weld, the cyclic load of 10 ksi is added to the local residual stress of 50 ksi, for a total of 60 ksi. However, with a yield strength of 50 ksi, the 10-ksi cyclic load causes some localized yielding. When the load is removed, some localized reduction in residual stress will be experienced, resulting in an assumed 40 ksi residual stress. When the cyclic load is reapplied, the stress (applied and residual) increases to 50 ksi again. Thus, the cyclic loads cause a localized stress that ranges from 40 to 50 ksi and back to 40 ksi.

For the second loading sequence, a compressive stress of 10 ksi is applied. Beginning with the residual stress of 50 ksi, the cyclic compressive stress lowers this value to 40 ksi. When the cyclic compressive stress is removed, the 50 ksi residual stress returns. Thus, with cyclic compressive stresses, the load cycle creates stresses of 50 ksi to 40 ksi to 50 ksi. With the application of hundreds of load cycles, the net effect of the two loading conditions is the same. Notice that in both cases, the stress range is the same.

Figure 11–1 is an illustrative applied stress versus time plot of the total stresses on a cyclically loaded structure. These stresses are the result of dead loads and live loads. The stress range ($\Delta\sigma$) is the difference between the maximum

stress (σ_{max}) and the minimum stress (σ_{max}), and is mathematically expressed as follows:

$$\Delta\sigma = \sigma_{max} - \sigma_{min}$$

The mean stress (σ_{mean}) is determined by this relationship:

$$\sigma_{mean} = (\sigma_{max} - \sigma_{min})/2$$

The alternating stress (σ_{alt}) can be found as follows:

$$\sigma_{alt} = \Delta\sigma/2$$

Several types of loading conditions could create the applied stress range plot of Figure 11–1. For structural applications, the most common case involves a fixed or dead load creating a tensile load. The cyclically applied live load creates an additional tensile load. For this situation, the minimum stress (σ_{min}) is that created by the dead load only.

The same applied stress plot could be created by significantly different conditions. For example, consider a situation wherein the live load creates both tensile and compressive stresses. While not typical in structural applications, this is common for rotating machinery. Assume that the dead loads result in a tensile stress that is the same as the mean stress in Figure 11–1. The tensile loading of the live load adds to the mean stress, creating the maximum stress. However, the compressive loading of the live load subtracts from the mean stress, resulting in the minimum stress. Thus, entirely different loading conditions may create a similar stress range versus time plot.

Figure 11–2 illustrates the stress ranges that result from different types of loading conditions. Consider, for example, the support for a machine that applies a cyclic load. The machine and the slab create a maintained dead load that creates, in this example, 15 ksi of stress on the member. The cyclic live load may increase the total stress to 25 ksi. In this situation, the stress range is [25 – 15], or 10 ksi. See Figure 11–2a.

In the second example, a hanger bracket under a beam is the element of interest. Connected to the bracket is a hoist. At rest, essentially no load is applied to the bracket, and thus the minimum stress is 0 ksi. When loads are lifted by the hoist, the stress level is increased to 10 ksi. Thus, the stress range is [10 – 0], or 10 ksi. See Figure 11–2b.

The third example is a cantilevered gate. In the lowered (horizontal) position, the bottom flange of the main beam to the gate is loaded in compression to a value of (–)7.5 ksi. When the gate is raised to the vertical position, the stress in

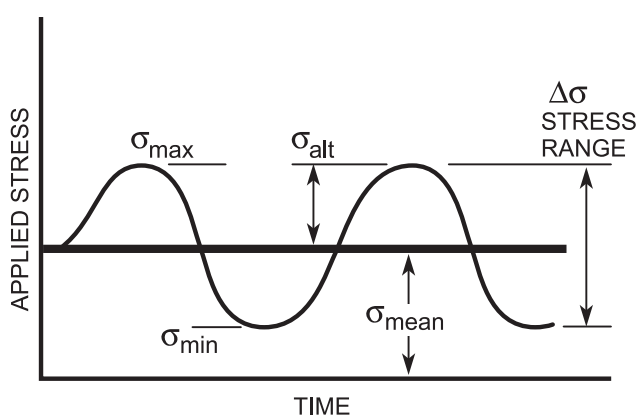

Figure 11–1. Applied stress versus time.

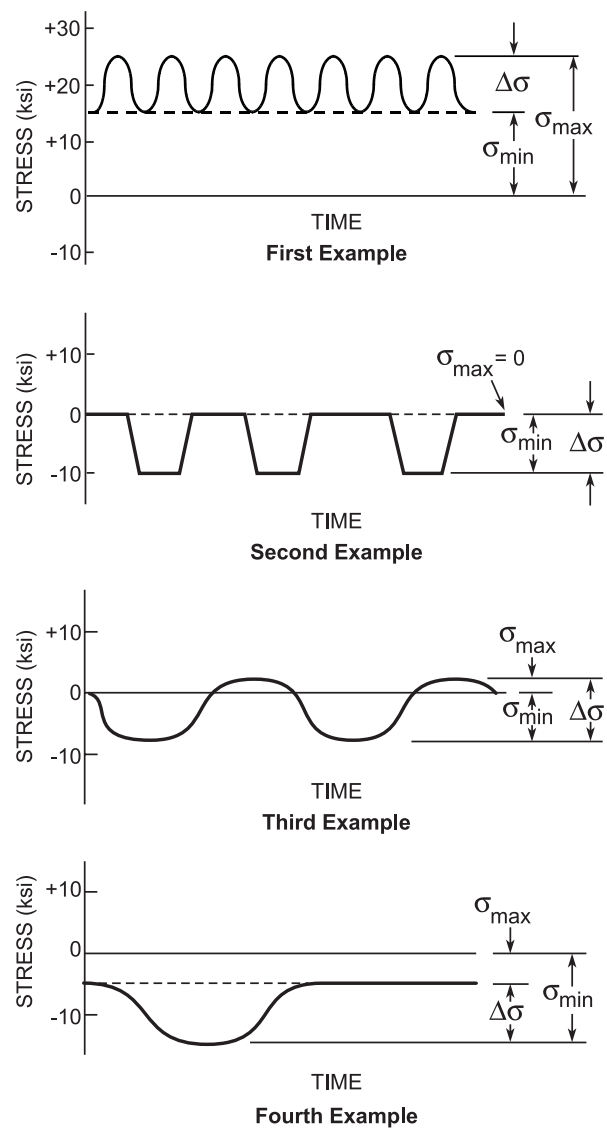

Figure 11–2. Examples of stress ranges.

the flange goes to zero. However, the full stroke of the gate causes the beam to go past the vertical position, resulting in a positive tensile stress of 2.5 ksi on the same flange. When the gate is lowered again, the cycle is repeated. Thus, the stress range is [2.5 – (–7.5)], or 10 ksi. See Figure 11–2c.

In the final example, consider the top flange of a simply supported beam that is part of a bridge-like structure within a building, across which forklifts travel. The dead load of the beam and the slab generate a compressive stress of –5 ksi. The forklift applies a live load, which increases the compression to a total of –15 ksi. The stress range is [–5 – (–15)], or 10 ksi. See Figure 11–2d.

A comparison of the four illustrative examples shows that the stress range, as determined by subtracting the minimum stress from the maximum stress, yields the same 10 ksi value. In fatigue, all four loading conditions would put the same demand on the members and connections of such members, since the stress range is the same. This is true, despite the fact that loading conditions varied significantly: tension to tension (Example 1), no load to tension (Example 2), tension to compression (Example 3), and compression to compression (Example 4). The static strength of the system must be established, and the design of the members and connections in terms of the static strength will be different. In Example 4, where the loading is compression to compression, fatigue cracks may initiate but will not propagate outside the region of the residual tensile stresses due to welding.

To reduce the stress range, two options are available: reduce the loads or increase the material available to resist the loads. Note that increasing the steel strength will not help; if no change is made other than using a higher strength steel, the stress range will not change. Furthermore, the stress raisers associated with welds on lower or higher strength steel are the same. Thus, the steel strength does not affect the fatigue performance of welded steel applications. An increase in the steel strength will result in an increased ability to carry dead loads, but does not increase the live load capability.

Ironically, using higher strength steel often increases the problems of fatigue, because when higher strength steels are specified, smaller members can be used to resist the

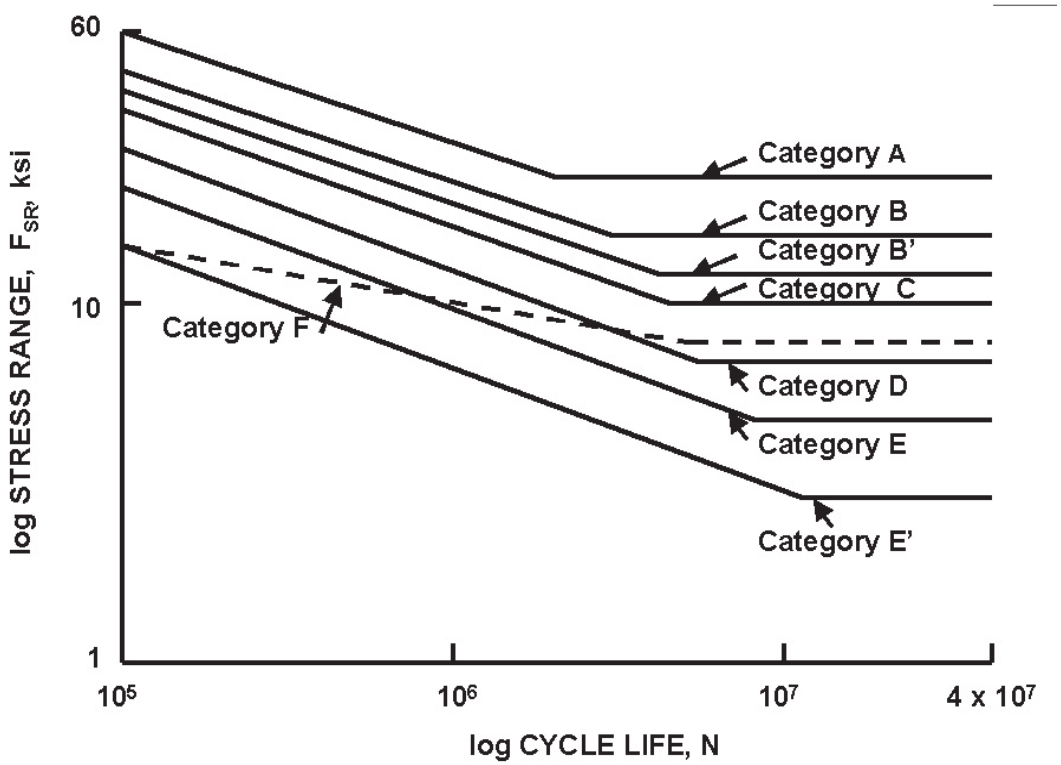

Figure 11–3. Stress range versus cycle life.

steady load. These smaller members, however, will result in increased stresses and increased stress ranges. With the increase in stress ranges, the design with the higher strength steel (and smaller members) will have a reduced life expectancy. Thus, given that under most situations loads cannot be reduced, the only design option is to increase the material available to resist the loads.

11.3 CONNECTION GEOMETRY

The second of the three key variables involved in design of members subject to cyclic loading is the geometry of the connection. The principal influence of the geometry lies in the nature and extent of the stress raiser that is created. Abrupt, sharp changes create significant stress raisers, whereas smooth, flowing changes do not. Geometric factors that must be considered include the type of weld (whether CJP, PJP, fillet or plug/slot), the orientation of the weld (parallel versus transverse to the applied load), the length of the weld (continuous versus intermittent), the treatment of the weld reinforcement (whether left-in-place or ground flush), and the quality of the weld.

This lengthy list of variables, and the myriad combinations that might exist, may seem daunting, but fortunately, all these factors have been distilled into eight categories in which the various combinations can be placed. For example, the longitudinal fillet weld joining the web to the flange of a plate girder has essentially the same fatigue behavior as the transverse CJP groove weld that makes a flange splice on the same girder, providing the reinforcement on the groove weld has been removed and that the weld is nondestructively inspected to ensure internal soundness.

The eight categories of details have been assigned alphabetical designations, from A to F. Categories B and E both have primed subsets (e.g., B′ and E′). Category A details have the highest permissible stress range for a given number of cycles, or alternately, for a given stress range, will yield the longest life. Category B details have a reduced permissible stress range as compared to Category A.

Figure 11–3 is a plot of the stress range (F_{SR}) versus the number of loading cycles (N) for the various categories of details. The graph is a log-log plot, so minor changes in the stress range can have a major effect on the cycle life associated with a given detail. With the exception of Category F (discussed below), all the curves are parallel to each other, allowing for the use of a similar equation to compute the design stress range. Category A details are permitted to have the highest stress range for a given life expectancy (e.g., number of cycles). Moving from Category A to E′, the permissible stress ranges progressively decrease for a given number of cycles of loading.

Associated with each detail is a threshold value, represented by the horizontal portion of the curves shown in Figure 11–3. If applied stress ranges are held at or below this value, infinite life is expected from the structure. For Category A details, the threshold behavior is experienced after approximately two million cycles, while Category B details achieve this behavior at approximately three million cycles and Category E′ details at about 20 million cycles. Category A details have a threshold value of 24 ksi, while Category B details have a reduced value of 16 ksi. Category E′ details have the lowest value of 2.6 ksi.

Category A includes all unwelded base metals, except for unpainted weathering steels. Category A includes flame-cut steel, providing the edges have a surface roughness value of 1,000 microinches or less, and providing there are no re-entrant corners.

Category B includes flame-cut copes and re-entrant corners, as well as drilled or reamed holes in base metal. Unpainted weathering steel is also placed in Category B.

Welded details characterized by Category B include the stress concentrator along the toe of longitudinal fillet welds and longitudinal CJP groove welds. Also included is the weld detail associated with transverse CJP groove welds with the weld reinforcement removed and inspected to ensure internal soundness. Category B includes flame-cut details and welds that impose little disruption in the flow of stress through a member, so the stress concentration effect is minimal.

Category C and D weld details cause more of an interruption in the flow of stress, while Category E and E′ represent those details with the most severe stress concentrations permitted. Category E details include the stress raiser created at the ends of longitudinal welds, including the ends of intermittent welds. Category E also includes the stress raiser that exists around plug and slot welds, and welds on the ends of cover plates. With Category E details, there are abrupt changes in the flow of stress, resulting in stress concentrations that locally amplify the overall global stresses. Accordingly, Category E and the related E′ details have the lowest permitted stress ranges.

Categories C and D involve details with stress ranges in between the B and E details. Category C details include those that constitute a significant stress raiser, but the members themselves carry limited stress, due to their orientation and size. These would include the stress concentration created by welded attachments that are relatively short in their orientation parallel to the direction of stress, such as transverse stiffeners on a girder. Also included is the stress raiser created by shear studs. For these types of short attachments, the stress raiser effect is reduced simply because little stress enters into the attachment. As the attachment becomes longer, Category C details become Category D, and when longer yet, they behave like Category E details.

A special subset of Category C involves transverse welds in T- and corner joints. A typical situation would be that of a cruciform, as shown in Figure 11–4. The same principles

could be applied to a single T. Depending on the relative size of the weld throat as compared to the base metal thickness t_p, fatigue failure may initiate either at the weld toe, or from the root of the weld. The weld may be either a PJP groove weld alone or a fillet weld alone, or a combination of the two. In situations where cracking initiates at the weld toe, this is a simple Category C detail. When the cracking initiates at the root, the design stress range must be reduced. The reduction factor R_{PJP} can be calculated from the following:

$$R_{PJP} = [0.65 - 0.59(2a/t_p) + 0.72(w/t_p)] / [t_p^{0.167}] \leq 1.0$$

where

$2a$ = the length of the unwelded root face in the direction of the thickness of the tension loaded plate

w = the weld leg size of the reinforcing or contouring fillet weld, if present

t_p = the thickness of the plate loaded in tension

The above equation may be used for PJP groove welds with or without reinforcing fillet welds. For the specific case where no fillet welds are used, then $w = 0$, and the above relationship can be simplified to

$$R_{PJP\text{-}FIL} = [0.65 - 0.59(2a/t_p)] / [\, t_p^{0.167}] \leq 1.0$$

For situations involving fillet welds only, then $2a = t_p$, and the general equation becomes

$$R_{FIL} = [0.06 + 0.72(w/t_p)] / [\, t_p^{0.167}] \leq 1.0$$

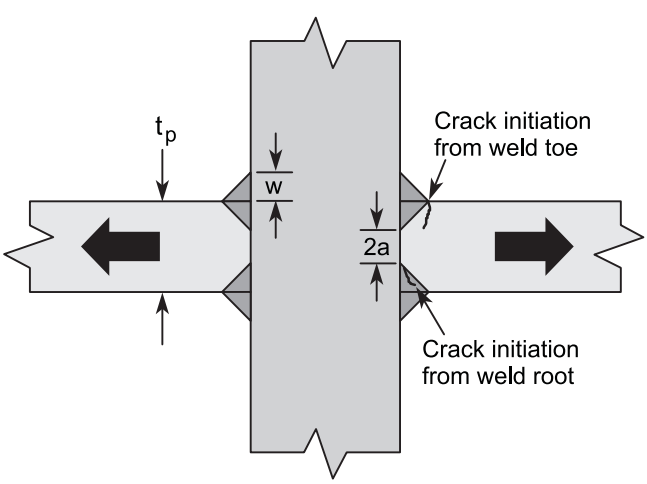

Figure 11–4. Special category C detail.

The reduction factor can never exceed 1.0, although it is mathematically possible for this to occur when very large fillet welds are used. In that case, cracking at the weld toe will control, and no reduction factor is needed.

No threshold value is supplied for the situation where cracking occurs from the weld root. Accordingly, for situations where infinite life is desired, the weld size should be increased to ensure that behavior is controlled by the weld toe (Category C), a detail for which a threshold value is provided.

Category F covers those few situations wherein fatigue failure through the weld throat is expected. This would include fillet welds, regardless of their orientation with respect to the direction of stress, as well as plug and slot welds. Normally, cracks initiate at the stress concentration created by the toes of these welds, and thus other category descriptions apply. With Category F, the cracking initiates in the weld metal itself. Fortunately, in those situations where the weld itself is the controlling factor (not the stress concentration at the weld toe), it is typically possible to increase the weld size or the number of welds, thus decreasing the stress range in the weld metal. When the stress range in the weld metal is sufficiently reduced, cracking at the stress concentration created by the weld toe may become the limiting factor. To control this, the stress range in the base metal must be reduced. A larger weld will not assist when Category F is not the limitation.

Category F has a different, nonparallel slope as compared to the plot of the other detail categories. Whereas the slope for cracking that occurs in base metal is 1:3, the slope for Category F is 1:6. This reduced slope implies that a decrease in stress range increases the life expectancy of weld metal more than would occur with the same decrease when applied to base metal, and this is precisely what the experimental data demonstrates.

This behavioral difference is due to the more homogeneous nature of the base metal; any fatigue cracks that initiate continue in material that is nominally identical. Weld metal, in contrast, is more heterogeneous, typically composed of multiple passes with as-deposited and refined weld metal. Additionally, welds will likely include small, acceptable inclusions. When fatigue cracks initiate in the weld metal, they propagate through the various metallurgical structures at different rates, depending on the microscopic local properties. Furthermore, when the cracks intersect inclusions, they tend to arrest momentarily. After enough load cycles, the crack will reinitiate and continue. The net effect is a reduced crack growth rate, and thus the difference in the slope of Category F.

All of Categories A through E′ apply to the nominal stresses in the base metal, not the stresses in the weld itself. The reason is simple: it is the stress concentration at the weld toe or stress concentrations on flame cut surfaces where cracks typically initiate. Category F is reserved for

the fatigue behavior of the weld metal, where cracking occurs in through the weld throat.

The descriptions above are meant to be illustrative, not exhaustive. AISC Specification Appendix 3 contains descriptions and illustrations of dozens of details. Part of this Appendix is shown in Figure 11–5. It is a fairly simple procedure to review the various examples and to identify a situation the same as, or similar to, the structural detail of interest. From the tables, the stress category can be obtained, as well as a constant C_f and a threshold value F_{TH}, which are discussed in the next section.

11.4 COMPUTATIONS

The basic equation for determining the maximum design stress range (F_{SR}) assumes the form of the following:

$$F_{SR} = (C_f / N)^{0.333} \geq F_{TH}$$

where

F_{SR} = design stress range, ksi
C_f = constant for the geometric detail
N = number of stress range fluctuations (e.g., number of cycles)
F_{TH} = threshold fatigue stress range for infinite design life, ksi

The coefficient C_f can be obtained from Table 3.1 of the AISC Specification. The number of stress range fluctuations can be determined from the life expectancy of the structure,

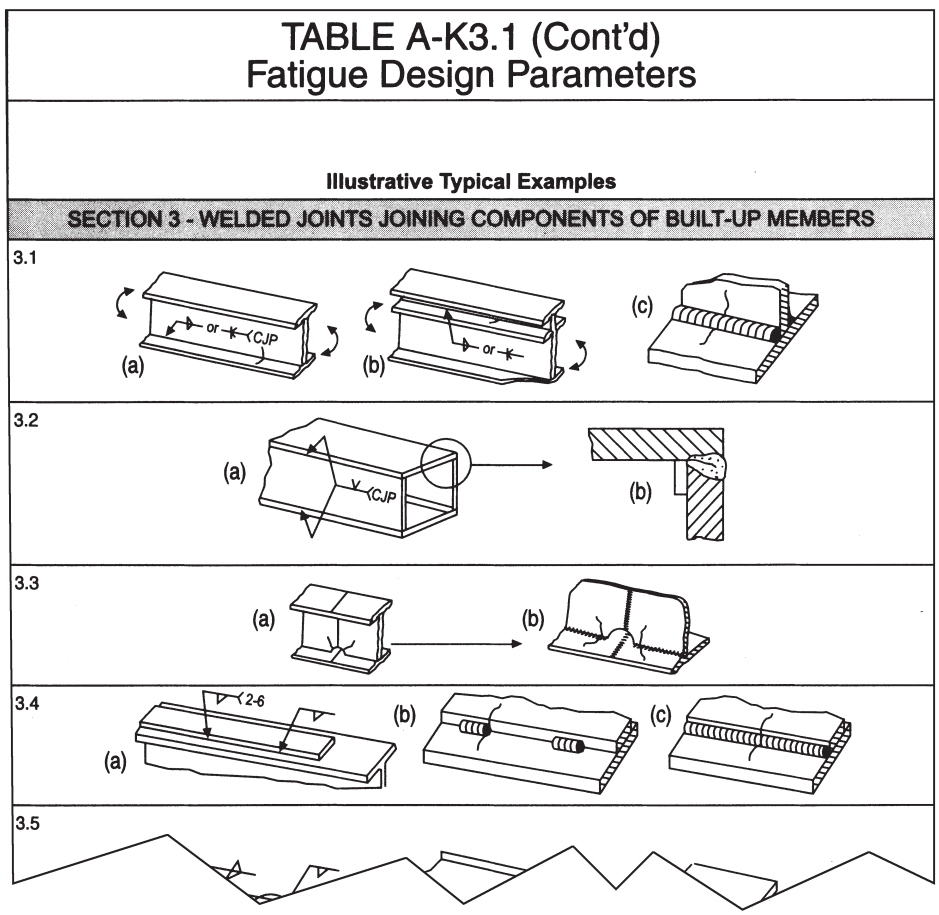

Figure 11–5. AISC Specification Table A-K3.1 example.

multiplied by the frequency of loading. For infinite life, the design stress range (F_{SR}) must be held below the threshold fatigue stress range (F_{TH}).

For Category F, the equation above assumes a slightly different format, as follows:

$$F_{SR} = (C_f / N)0.167 \geq F_{TH}$$

The exponent reflects the difference in the slope of the curve for Category F material as can be seen in Figure 11–3. This difference causes the constant C_f for Category F to be two magnitudes higher than that for the others.

For the previously mentioned situation where Category C behavior must be modified by the reduction factor R_{PJP}, the following relationship is used:

$$F_{SR} = R_{PJP}(C_{f\text{-}c} / N)^{0.333} \geq F_{TH}$$

where

$C_{f\text{-}c}$ = the coefficient constant for Category C

11.5 INSPECTION ISSUES

The stress ranges for the various categories of details were experimentally determined, based on full-scale and large-scale members fabricated in accordance with welding codes applicable for bridge members. Thus, the members included acceptable fabrication discontinuities but were free from defects (e.g., unacceptable discontinuities). In the situation of CJP groove welds, transverse to the direction of stress, the welds are required to be inspected by ultrasonic inspection (UT) or radiographic inspection (RT) to ensure internal soundness. This applies whether the weld reinforcement is removed (Category B) or left in place (Category C).

11.6 SPECIAL FABRICATION/ERECTION REQUIREMENTS

Special fabrication and erection requirements apply to members subject to cyclic loading. Included are the following:

- The AISC Specification allows longitudinal steel backing to remain in place, provided it is continuous for the length of the joint. Any splices in the backing are required to be joined with CJP grove welds, with reinforcement removed. Such splicing is required to take place prior to assembly in the joint.

- Transverse steel backing is required to be removed.

- Reinforcing, or contouring fillet welds are required on top of PJP or CJP groove welds in T- and corner joints. AISC requires this to be no less than ¼ in. while AWS defines the minimum size as $T_1/4$, where T_1 is the thickness of the member in which the groove weld is placed, but the weld need not exceed ⅜ in. Also, AWS requires that for cyclically loaded structures, the minimum fillet weld size be 3⁄16 in.

- The AISC Specification requires the use of weld tabs "for butt joints in regions of high tensile stress." After the weld has been completed and cooled, weld tabs are required to be removed.

- Tack welds may create unintended load paths and, when subject to cyclic loading, may cause fracture initiation. Intermittent tack welds joining longitudinal backing to a box member, for example, will function as intermittent welds and are considered to be Category E details. In contrast, a continuous fillet weld attaching the same longitudinal backing is Category B.

- Miscellaneous attachments, including erection aids, must also be carefully considered as they too can create unintended load paths, or stress raisers.

- Bridge welding specifications like AWS/AASHTO D1.5 place strong emphasis on hydrogen control and the deposition of notch tough weld metal. The presence of an undetected crack, whether due to hydrogen or other mechanisms, may have an extremely detrimental effect on the fatigue life of a structure, depending on the orientation of the crack as compared to the stress field. While notch tough material does not reduce fatigue crack initiation, nor slow the cyclic propagation of cracks, it does allow for such cracks to grow to a greater size before the onset of fracture.

12. Special Welding Applications

12.1 WELDING ON ANCHOR RODS

12.1.1 General

Before any welding on anchor rods is considered, the rod's composition must be considered, as addressed in detail in Section 4.3.4 of this Guide. This point cannot be overstressed; material with unknown or poor weldability simply should not be welded upon until appropriate testing and analysis has been performed.

12.1.2 Extending Anchor Rods

When an anchor rod is set too deep, there may be an inadequate length of thread available for proper engagement of the nut. In extreme conditions, the end of the anchor rod may be below the top surface of the base plate. Possible solutions that involve welding are often offered, but such approaches must be carefully evaluated.

Even when a weldable anchor rod is involved, several commonly proposed corrective concepts are problematic. For example, if the rod is very short, some may be tempted to use a plug weld in the base plate to weld on to the end of the anchor rod. However, plug welds are intended to be loaded in shear, not in tension. When there is insufficient thread for full nut engagement, some may contemplate welding the nut to the rod. Nuts are always hardened materials, and typically have poor weldability. Additionally, the inside surface of the nut is threaded, which makes it a poor surface on which to consider welding.

Before welding is considered, mechanical fastening options should be exhausted. For example, in some cases, it is possible to machine a recess into the top surface of the base plate, allowing the nut to be installed in the normal manner. Where holes in the anchor plate can be enlarged, a coupling nut can be used to mechanically add an extra length of anchor rod.

When an anchor rod must be extended by welding, and when the weldability of the anchor rod has been established, the details of the splice are the next consideration. Welding two small-diameter, solid cylindrical parts to each other with the goal of achieving 100 percent fusion is a significant challenge, simply due to the geometry involved. Compounding this difficulty is the welder's access to the joint. Inevitably, the splice location will be only a few inches above the ground, requiring the welder to lie prone when the weld is made.

A connection detail has been developed to address some of the problematic aspects associated with anchor rod extension (Fisher and Kloiber, 2006). The weld joint involved is a double-sided horizontal bevel groove weld. The extension rod is prepared by applying two bevels that form a chisel-like configuration (not a pencil point) as shown in Figure 12–1. A ring or washer is made from steel with a known weldability, and of a thickness great enough that welds will not melt through it. The top surface of the ring is positioned so that it is flush with the too-short rod. The ring acts as a weld tab, allowing the arc starts and stops to be placed outside of the width of the anchor rod. As with prequalified double-sided welds, the root region of the first weld pass should be back-gouged before the second side is welded. When the welding is complete, the ring can be removed by grinding or other methods and finally, the weld can be ground flush around the perimeter.

Welding is typically performed with SMAW using electrodes with low-hydrogen coatings. The strength of the electrode must be selected to match the strength of the anchor rod used. Depending on the rod composition, preheat may be required.

12.1.3 Welding Anchor Rod to Base Plates

If the anchor rod extends too high above a base plate, the thread may be of an inadequate length to permit the rod to be tightened. Potential solutions could include the use of a stack of washers or a pipe washer. If these are not feasible,

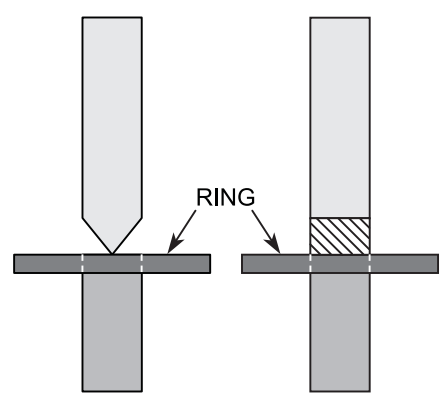

Figure 12–1. Anchor rod extension detail.

welding the anchor rod to the base plate is a possible option. Anchoring of the rod in the concrete should be investigated; unless the rod was cut long, the extra exposed length implies that less rod is buried in the concrete. The weldability of the anchor rod must be investigated. Even if these conditions prove to be satisfactory, welding the anchor rod to the base plate will not tighten the rod as would be the normal condition.

Anchor rods can be welded directly to base plates. However, because the holes into the base plate are larger than the anchor rod diameter, a gap will exist between the two. A heavy washer can be cut of a known and weldable material and installed around the rod, and a fillet weld can be used to join the rod to the washer (AISC, 1997a).

In addition to the anchor rod composition and any preheat requirements, the base plate must be considered. The base plate, due to the typical thicknesses involved, may be the controlling element in terms of the required preheats.

A variety of welding processes may be used for these operations, but due to the limited amount of welding involved, SMAW is typically used along with electrodes with low-hydrogen coatings.

12.2 WELDING ON COATED STEELS

12.2.1 General

Various coatings are applied to steel surfaces, ranging from a light coat of primer, to various final coatings of multiple-coat paint systems, to metallic coatings such as galvanizing. Because there is typically a cost associated with removal of such coatings before welding, the suitability of welding on such surfaces is often questioned. When coatings are thin, welding can typically be performed without any harmful effect on the weld, but when the coatings are thick, weld quality may suffer. Critical variables that determine the suitability of welding on various coatings involve the coating type, the thickness of the coating, and the welding procedure. Another factor that must be considered is the fumes that are given off when various coatings are heated by welding; special precautions may be necessary to protect the welder and others in the workplace from such fumes.

AISC Specification Section M3.5 addresses the issue of welding through coatings relative to field welds by requiring that surfaces within 2 in. of any field weld be free of materials that would prevent proper welding or produce objectionable fumes during welding. AISC Specification Section M4.5 requires shop paint on surfaces adjacent to joints to be field welded to be wire brushed if necessary to assure weld quality.

AWS D1.1 Provision 5.15 addresses the issue by requiring such surfaces to be free from "foreign material" that would prevent proper welding or produce objectionable fumes. Furthermore, "a thin rust-inhibitive coating" may remain.

The potential influence of the material coating on weld quality depends on the joint and weld type. For example, plate may be primer coated but then thermally cut and beveled (e.g., the surfaces on which the weld will be placed will be free of the primer). Thus, in a butt joint, primer-coated steel is less likely to cause porosity problems than would the same steel when used in a T-joint and joined with fillet welds.

The welding-related problems that can occur when welding on thick coatings include porosity, cracking, and incomplete fusion. Many paints contain hydrocarbons that are a source of hydrogen, which can lead to cracking. Porosity will typically, but not always, extend to the weld surface when welding on heavily coated surfaces, making it easier to detect such problems in production. When excessive porosity is evident, the surfaces must be cleaned. In extreme cases, very thick coatings may preclude proper fusion. Fortunately, heavy coatings of this nature often interfere with the flow of electrical current as well, and thus it is difficult to even maintain an arc under such conditions (although this is not the situation with heavily galvanized materials).

12.2.2 Galvanized Materials

Galvanized materials may consist of electroplated sheet materials (such is often encountered with sheet steel decking) as well as hot-dipped structural elements. Sheet steel components used for structural steel applications are typically welded without any particular difficulty. However, when welding on hot-dipped parts, the zinc may enter into the liquid weld metal and lead to segregation cracking (see Section 5.3.2 of this Guide). This is more problematic than porosity, as the potential consequences of cracking are more serious, and moreover, such cracking is often difficult to detect.

Cracking tendencies of welded galvanized steel members depend on the following factors:

- The silicon content of the weld metal.
- The degree of penetration of the weld beyond the root.
- The thickness of the base metal (which affects restraint).
- The coating weight of the zinc (a function of the coating thickness).
- The microstructure of the zinc coating, which is related to the base metal composition and the silicon content in particular (AWS, 1972).

12.2.3 Testing

For critical applications involving coated steels, the potential influence of the coating should be investigated. This may be as simple as performing a fillet weld break test (described in

AWS D1.1 Provision 4.11), which should reveal any problems associated with making fillet welds on coated materials. For groove welds, the surface on which weld metal will be applied will likely be free of any coatings. If this is not the case, a procedure qualification test in accordance with AWS D1.1 Section 4 would be a good way to gain confidence that the coating will pose no problems.

The qualification test should duplicate as closely as possible the production conditions that will be encountered, including the thickest coatings that will be used. The limitation of variables contained in Table 4.5 of AWS D1.1 may not be applicable when evaluating the weldability of various coatings. For example, Table 4.5 permits a different low-hydrogen covered electrode to be interchanged without WPS requalification. However, such changes may or may not be acceptable when various steel coatings are involved.

12.2.4 Ventilation

When heated by welding, various coatings emit fumes that may be harmful to the welder. Adequate ventilation must be provided (as is true for all welding), and respirators may be required. ANSI Z49.1:2005, *Safety in Welding, Cutting, and Allied Processes*, available as a free download from AWS (http://www.aws.org) should be consulted for information in this regard.

12.3 WELDING ON HEAVY SECTIONS

Welding on thick, restrained steel is always a challenge, and successfully welding on "heavy sections" is no exception. AISC Specification A3.1c uses this term to describe rolled shapes with flange thicknesses exceeding 2 in., and built-up heavy shapes composed of components made from plate exceeding the same dimension. In the case of the rolled sections, these were formerly the Group 4 and 5 rolled shapes, typically called "jumbo sections." Originally contemplated for use as column sections, these shapes found use as tension members in trusses and other tensile members. Material properties, detailing practices, and workmanship problems, and perhaps other issues, combined and resulted in some cracking during fabrication and erection (Doty, 1987; Fisher and Pense, 1987; Blodgett and Miller, 1993). In response, the AISC Specification imposed additional material and fabrication requirements, which are reviewed below.

An example of a splice to a tension chord of a truss will be used as an illustration, although the principles are applicable to other situations where heavy members are joined by welding.

The typical cracking that had been experienced in the past was welding related, with the cracks occurring in the base metal, driven by the residual tensile stresses on the thermally cut surface as well as the shrinkage stresses caused by welding, not by service loads. Cracking often initiated from workmanship-related notches associated with weld access holes. Investigation into the problems revealed that near the web-to-flange interface, material existed with low Charpy-V Notch (CVN) toughness, even though at that time, the material was not required to meet minimum CVN toughness levels, nor was this region the typical ASTM CVN testing location. Still, small notches, combined with the high residual stress of welding and the low localized fracture toughness, enabled cracks to initiate in this region and propagate elsewhere.

The solution to the problem was multidimensional. To ensure that the base metal had adequate toughness to resist fabrication stresses, a minimum CVN toughness of 20 ft-lb at +70 °F was imposed. The CVN test specimen was required to be taken from a new location, not from the flange tip as is typically the case, but from a portion of the flange directly under the web—the location expected to have the lowest CVN values (AISC Specification Section A3.1c).

To control notches in the area, a maximum surface roughness value was imposed. When the radius portions of the access holes were to be thermally cut, a preheat of 150 °F before thermal cutting was mandated to decrease the residual stresses on the cut surface. Drilling a hole to form the radius eliminated the potential for harmful metallurgical structures developing due to thermal cutting, as well as reducing the residual stresses from cutting (although such a practice was not mandated in the AISC Specification). All thermally cut surfaces were required to be ground to a bright finish and inspected with magnetic particle or dye penetrant. The result was a greatly reduced likelihood of notches and cracks in this region.

To help minimize the concentration of residual stresses from welding, the weld-access holes were modified and increased in size, not simply for welding access, but to minimize the interaction of multidirectional residual stress fields created by the weld shrinkage (see Section 3.9.3 of this Guide).

While not incorporated into the AISC Specification, welding sequences to minimize residual stresses were developed. Balanced welding was encouraged; some on the web, some on the flanges, versus completely welding the web first and then the flanges, or vice versa. Weld details that minimized the weld volume were encouraged. Since the cracking was experienced from the access holes, welding sequences that placed the majority of the weld metal on the outside of the flanges, as compared to the inside near the access hole, were encouraged. Also, the final weld passes (with the highest final residual stresses) were encouraged to be placed on the side of the flange away from the access hole.

Initially, the AISC Specification called for weld tabs to be removed after welding, as well as for weld backing (if used) to be removed. Also, the minimum level of preheat was specified to be 350 °F, even though AWS D1.1 never

required preheats of this level for prequalified WPSs. This was used to help minimize residual stresses. These three requirements, having been determined to be unnecessary and having the potential to cause more harm than good, were eventually dropped. Also, requirements for notch-tough weld metal were added.

Applying these changes in the AISC Specification essentially eliminated the cracking problems.

12.4 WELDING ON HEAVILY RESTRAINED MEMBERS

Restraint cannot be easily quantified, and thus terms like "heavily" and "highly" restrained can only be qualitatively described. Restraint is more likely to be identified by "feel" and experience. High restraint is typically associated with welds with the all of the following conditions: weld throat dimensions of 2 in. or greater, weld lengths of 1½ ft or more, and where steel members intersect from all three orthogonal directions. A concentration of CJP groove welds in a localized area increase concerns about welding under highly restrained conditions. Thus, highly restrained members would include splices of heavy sections (discussed above in Section 12.3), welded splices on transfer girders, various splices on trusses, and others.

Compounding the challenge of welding under such conditions is the reality that assemblies of highly restrained members typically serve critical functions. As redundancy decreases, for example, the remaining members are typically larger and thus more restrained, and simultaneously more critical in that fewer alternate load paths exist. Accordingly, it is important that such connections are properly designed, detailed, fabricated, and inspected.

The basic concern associated with welding on restrained members is that as the weld and surrounding base metal cool after solidification, instead of accommodating the shrinkage strains by movement of the parts or straining the material, residual stresses will build up and cause the material to crack instead. To mitigate this tendency, minimize the conditions that encourage fracture, and maximize the conditions that accommodate shrinkage strains.

Fracture occurs because of cracks and crack-like discontinuities, low resistance to fracture (typically measured in terms of Charpy V-notch toughness), and high applied or residual stresses. For fabrication-related fracture, the stresses that drive cracking are the residual stresses of welding. When welding on highly restrained members, surfaces of materials should be smooth. Copes and weld-access holes, flame-cut and sheared edges, punched holes and other prepared surfaces that will be subject to the shrinkage stresses of welding should be carefully inspected before welding to ensure freedom from stress raisers. Grinding questionable areas is a simple way to eliminate potential crack initiation sites.

Using base metals and weld metals with defined notch toughness levels is helpful. Preheat can improve the fracture toughness of the material during fabrication in this manner—at higher temperatures, steel is tougher. For some steels where the fracture toughness transition temperature is very near room temperature, using preheat may shift the material's behavior from lower shelf to upper shelf, providing significantly better resistance to fracture when at the elevated temperatures. Improved fracture toughness at elevated temperatures will assist in resisting welding-imposed residual stresses, but when the steel returns to room temperature, the fracture toughness will return to previous levels.

Principles that reduce shrinkage stresses, and those that reduce restraint, should be applied when heavy sections are welded. Section 5.5 of this Guide provides coverage of measures to reduce the shrinkage stresses, while Section 5.6 discusses techniques to reduce restraint. Finally, Section 5.7

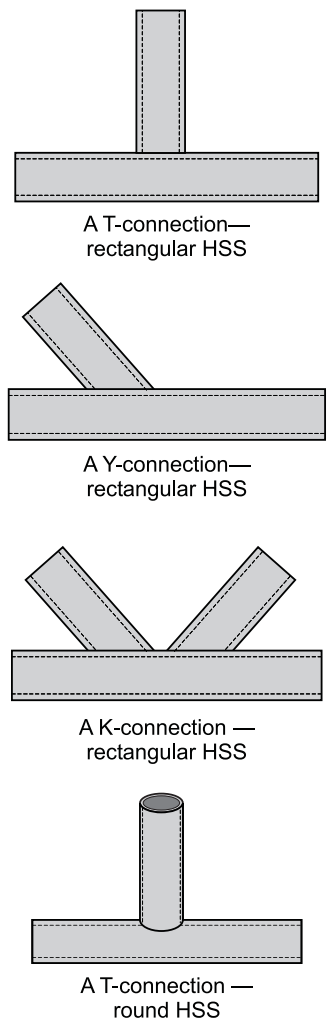

Figure 12–2. Tubular T-, K and Y connections.

provides information on post-welding operations to reduce the residual stresses. These principles are directly applicable to welding on heavy sections.

12.5 WELDING HSS

12.5.1 Introduction

Hollow Structural Sections (HSS) are an increasingly popular structural material, offering many structural and architectural advantages. Connection detailing, fabrication practices, and inspection procedures for HSS are quite different from those associated with plate and shape fabrication. This brief section will serve only as an introduction to the overall topic.

Connection methods for HSS fit into two broad categories: directly welded and welded/bolted connections. Unlike structural shapes that can be assembled with purely bolted connections, HSS nearly always involve at least some welding, even if only to attach detailing material that permits bolting.

HSS can be joined to plates, to shapes, or to other HSS. HSS to plate examples include HSS columns to base plates and shear tabs to tubular columns, as well as HSS braces to gusset plates. Shapes may be directly connected to HSS columns in moment connections (typically with a wide flange beam) or tube columns to supporting beams. These are relatively easily designed and fabricated connections, although the limit states that must be considered in the design of such

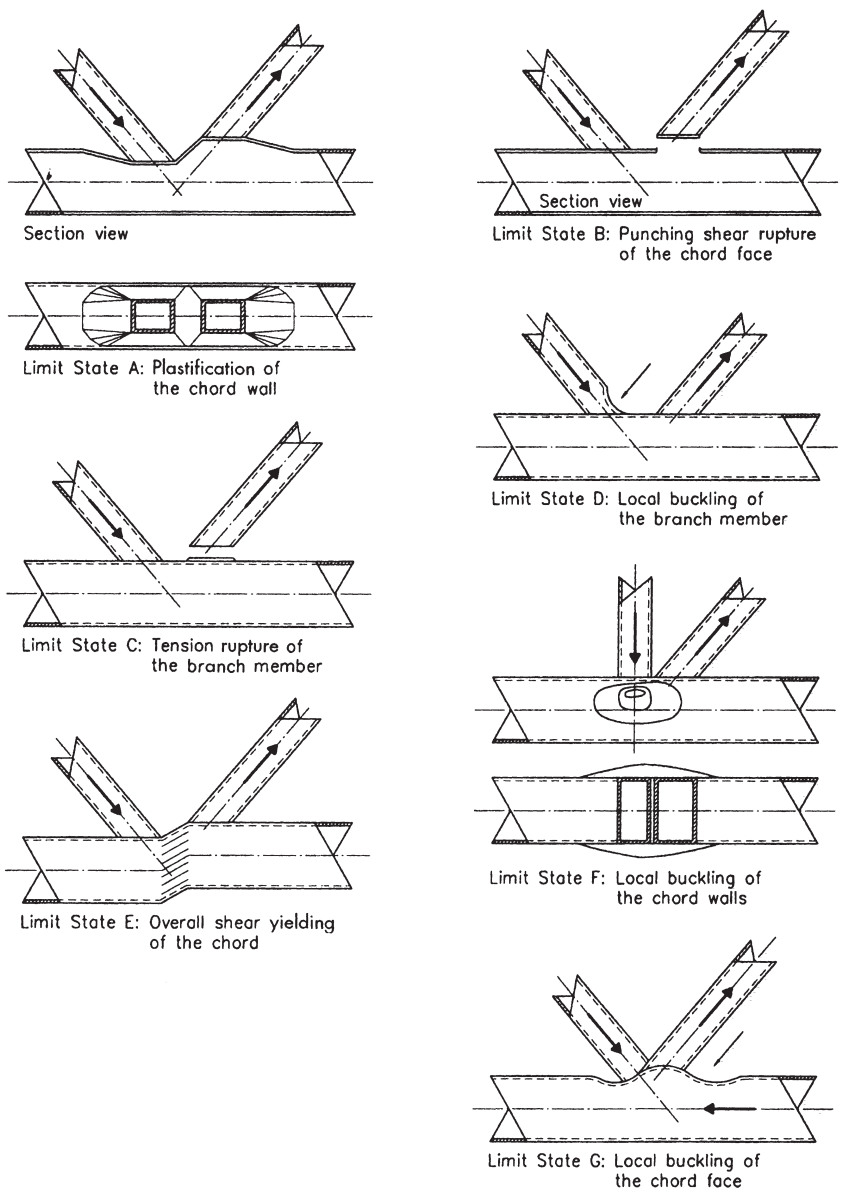

Figure 12–3. Limit states for K-connections in rectangular HSS.

connections are somewhat different than those assumed for typical applications involving shapes and plates.

A popular application of HSS is for trusses, or truss-like assemblies, where tube-to-tube connections are made. Such assemblies may have the various HSS members intersecting each other, forming Ts, Ks, and Ys as shown in Figure 12–2 on page 124. The details associated with such connections are quite different from shapes and plates and require special thought and planning.

HSS fits into two distinct categories: round and rectangular, with square HSS a subset of rectangular HSS. Round HSS must be approached differently than rectangular HSS.

12.5.2 Connections and HSS Member Size

With HSS, the capacity of the connection is rarely controlled by the weld size and other limit states typically control. As a result, HSS member sizes may be determined based upon connection demand. Several limit states exist as shown in Figure 12–3 on page 125, and the chord member is often the controlling element.

Given the geometry of the connected elements and their different relative flexibility, the loading on the weld is often nonuniform. As a result, the welds may "unzip" if such nonuniformity is not considered.

12.5.3 Overall Configurations of HSS Assemblies

When joining rectangular HSS, branch members should preferably be made of slightly narrower members than main members to avoid the difficulty of welding on the rounded edge of the main member. Figure 12–4 illustrates a matched connection (nonpreferred) as well as a stepped connection (preferred). In the case of the matched connection, a fillet weld can be used on two sides, but a flare bevel groove must be used on the other sides. Depending on the corner radius of the main member, a gap may exist at the root, requiring the use of backing or more careful profile cutting of the branch member. These problems disappear, however, when the branch member is narrower. Simple fillet welds can then be used. Preferably, the branch member is narrow enough to permit the fillet weld to be placed on the flat side of the HSS chord.

For K-connections, gapped connections are preferred over overlapped connections from a welding perspective since joint preparation is easier, and access for welding is typically improved. However, overlapped connections have increased strength capacity. For round HSS, the preference for gapped connections is even greater. The gapped connections are easier to fabricate, but the overlapped connections often have greater strength and stiffness.

For K- and Y-connections, the acute angle should be 30° or more to keep welding and inspection of the weld in this area from becoming too difficult.

12.5.4 Cutting and Preparing Joints in HSS

Square and rectangular HSS may be cut with methods similar to those used for structural shapes: saws and thermal cutting methods. Sawing is particularly effective with HSS, as the cut edges are often on one plane. Complex intersections, however, may necessitate careful thermal cutting. For the thicknesses of materials that are typically involved, plasma and laser cutting are particularly effective.

Round HSS provide a particular challenge with respect to fabricating the tubes for directly welded connections in that the ends of the tubes must be "saddle cut" for T-K-Y connections. For Ts, the cut is relatively easy to make, but when other than a 90° intersection is used, the cut profile becomes complicated, and the situation is compounded further when there is a need for an ever-changing bevel angle on the edge. Fortunately, computer controlled plasma and laser cutting

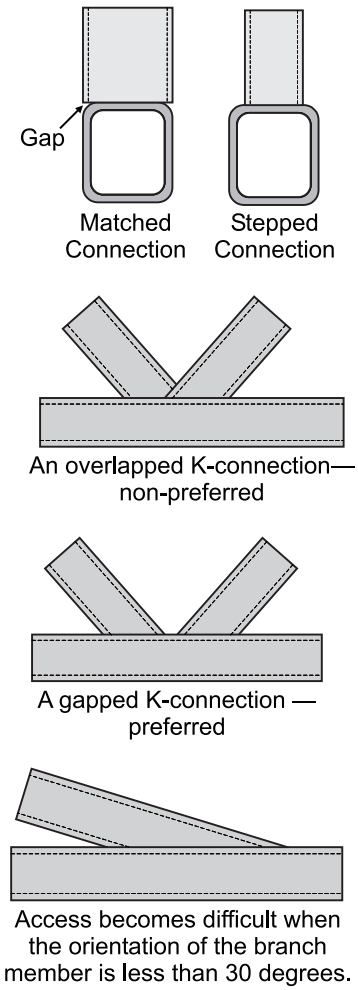

Figure 12–4. HSS details.

apparatus is available to cut such profiles, greatly simplifying the process while increasing fitup quality.

When round HSS are used in a truss-like assembly, special attention must be paid to the assembly sequence. For example, if the chords are fixed relative to each other, a cut-to-length vertical member cannot be inserted into the space, a problem that does not happen with box HSS (see Figure 12–5). Special techniques can be used to overcome this problem, typically involving cutting the tube and making an extra splice in it. A planned out sequence can overcome this problem; an "E" configuration is made first, and the final chord added later.

12.5.5 Welding HSS

HSS routinely require all-position welding, and in the case of round HSS, the orientation of the joint continually changes. Thus, the welding process and position of welding typically necessitate all-position capability. HSS material is generally clean and free of heavy mill scale and oxides, and therefore the welding process does not need the deoxidizing capability that might be necessary for welding on hot rolled material. HSS is often used in AESS applications (see Section 12.6 below) and may be painted with glossy paint after welding. Welding processes that generate low levels of spatter are desirable since they minimize after-welding clean up efforts. All of these factors and others will drive welding process selection, and will determine the suitability of the welding procedures.

A key process requirement, particularly for T-K-Y connections, is to have easy access to the joint. SMAW provides for easy access in terms of getting into the root of the joint, although the initial length of the electrode may be restrictive in some situations. Gas-shielded processes require shielding gas nozzles that often restrict access and visibility, particularly on members that intersect at acute angles. FCAW-S overcomes this restriction and is often used for this singular purpose in T-K-Y connection fabrication.

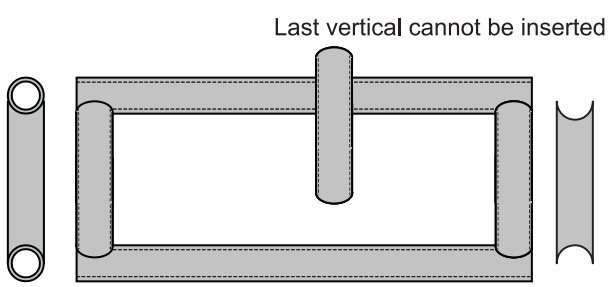

Figure 12–5. Assembly problems with round HSS.

AWS D1.1 outlines specific welder qualification tests for welding on T-K-Y connections and other tubular applications. The required tests replicate the types of weld joints and conditions encountered in tubular construction and are generally more demanding than the tests required by AWS D1.1 for welders working on plates and shapes only.

AWS D1.1 does not contain specific UT acceptance criteria for tubulars, but rather requires that such criteria be specified in contract documents.

12.6 WELDING AESS

Architecturally Exposed Structural Steel (AESS) is an exciting and growing use of structural steel, being used in sports stadiums, airports, shopping malls, and even churches. Just as the members for AESS must be treated differently from routine structural steel, so the welds may need to be treated differently as well. AISC *Code of Standard Practice* requirements for AESS are sufficient for many projects (AISC, 2005a). For applications demanding further restrictions or treatments, the requirements must be clearly communicated to the contractor in bid documents. Furthermore, since "beauty is in the eye of the beholder," mock-up samples can and should be used to help communicate expectations to all parties involved. (AESS Supplement, 2003).

As a general principle, the AESS visual quality acceptance criteria should be established with an understanding of the distance the viewer normally will be from the structural member and the welds in particular when the structure is in place. For example, a roof truss 20 feet above the floor should not be subject to the same weld appearance criteria as the column that supports the truss, when the column is at eye level. The AESS visual acceptance criteria should not be confused with the normal AWS D1.1 visual acceptance criteria, which should be met for all welds, whether the welds are visible nor not.

Specific AESS members are required in the AISC Code of Standard Practice to be identified on the drawings. Welds requiring special contours, finishes, or profiles, including those that are intended to be ground, should be clearly noted. Welding symbols are useful for this purpose. Cut edges requiring special treatments should also be identified.

While intermittent welds may satisfy design requirements, continuous welds may be specified for architectural reasons. However, continuous welds may increase distortion, another potential architectural and aesthetic concern. In such cases, the use of nonmetallic material to fill the joint may be a better solution than adding additional weld metal. Continuous welds around all seams may necessitate violations of AISC Specification or AWS D1.1 requirements, and any such issues must be resolved before fabrication begins.

Various weld details and practices that are routine for normal structural steel fabrication are often unacceptable for

AESS. For example, steel backing may be required to be removed, and weld tabs are typically required to be removed from AESS. Erection aids, tack welds, and various temporary welds are typically required to be removed and the area ground for AESS.

In AESS, weld access holes may be required to be filled, but filling such holes with welded-in-place plugs can be problematic. Non-metallic inserts should be considered rather than welding in this region of high restraint and high residual stress.

Tolerances acceptable for general fabrication may not be acceptable for AESS. Furthermore, the required dimensions for various details such as copes and access holes may be prescribed differently for AESS. Again, all such variations from normal practice must be communicated to all parties in bid documents.

Regarding welding processes and procedures, AESS is ideally welded with processes that produce minimum levels of spatter. Where the steel can be welded in the horizontal or flat position, SAW is ideal in both regards, and it also produces welds with smooth surfaces. For semiautomatic work, and for out-of-position work, GMAW is ideal. Spray transfer can be used for horizontal and flat position welds, whereas pulsed-spray transfer works well for out-of-position work.

AESS often requires the application of coating systems that necessitate careful surface preparations. Two basic approaches may be taken: The material may be blasted before welding, generating a near ideal surface on which to weld. However, spatter is more likely to stick to such surfaces, and there will likely need to be some after welding cleanup on smoke on the previously cleaned surfaces. Alternately, the assemblies can be fabricated from as received material (e.g., with mill scale present) and blasted after welding. When this is done, the blasting cleans both the steel and the weld area. The approach chosen may affect the selection of preferred welding processes.

12.7 SHOP VS. FIELD WELDING

Control of welding is always more easily accomplished in the shop, as is true of some other operations such as painting. This does not mean, however, that quality, economical welding cannot be accomplished in the field. Welding in the field can be more economical than bolting, as shown in Section 14.3.8 of this Guide.

Most of the technical challenges associated with field fabrication are related to the environment. Wind, rain, cold temperatures, and dealing with materials that have been exposed to field storage conditions are all inherently related to field welding conditions. Field welding typically requires more out-of-position welding, and access to the joint is usually more awkward. Yet, all of these conditions can be mitigated by good planning and use of proper tools. For example, the use of FCAW-S can eliminate the problems associated with welding in windy conditions. Tents or other enclosures can keep the welder and the joint out of the rain and cold. Out-of-position welds can be made easily by a skilled welder using the proper electrode and procedures. Storing staged material on timbers rather than on the ground can do a lot to keep material clean.

Field welding is subject to the same AISC Specification and AWS D1.1 provisions as is shop welding, including requirements for welder qualification and ongoing inspection by the contractor's inspector. Welding procedure specifications are subject to all the same prequalification and qualification requirements, regardless of where the welding is performed. Just as AISC has shop certification programs, a similar program exists for field erectors.

12.8 WELDING ON EXISTING STRUCTURES

12.8.1 General

Welding on existing structures may be necessary for a variety of reasons, but it generally falls into one of two categories: modifications to the structure to reconfigure the structure for different purposes and repairs to structures due to damage. Modifications may be simple additions to existing structures, but more often than not, they involve strengthening the structure to add load-carrying capacity. Repairs may be required due to the effects of overloading caused by natural events such as tornados, earthquakes or fire, or they may be needed to replace corroded material. The approach to each of these conditions may be slightly different and the AISC Specification requires the engineer to develop the details associated with such operations (AISC Specification Appendix 5). Welding-related concerns are addressed in a general manner below. In addition, these issues are discussed in AWS D1.1 Section 8, which also has an extensive and helpful commentary.

Before welding on existing structures, the steel should be investigated with respect to any potential welding problems, particularly when the structure involved is riveted. Section 4.4.3 of this Guide contains a summary of historic steels and their relative weldability.

12.8.2 General Welding Precautions

Existing structures are often filled with combustible materials as well as pipelines that contain natural gas or other combustible fluids. The sparks from cutting torches and welding operations have created fires on many occasions. Preheating torches are another source of potential problems. Appropriate precautions must be taken to control the potential fire hazards.

The welding work lead circuit is another source of potential fire creation. It is simple and convenient for a welder to

attach the work lead to a building frame member, perhaps hundreds of feet away from the point where welding is being performed. The welding current must pass through the structure and may take some unanticipated paths, such as through sheet metal duct work, electrical conduit, etc. At a point of high electrical resistance, localized heating of the portion of the welding circuit can cause a fire, one that is deeply hidden in the existing structure and away from the welding operations. To overcome this problem, the welding work lead should be attached as close as possible to the point where welding is to be performed.

12.8.3 Welding on Members under Load

Before any work is performed, particularly if cutting is involved, the loading condition on the structure must be examined, considering both dead and live loads. Although it is often impractical, it is always desirable to remove as much load as possible before work is begun. Shoring may be necessary.

Thermal cutting on members loaded in tension must be done with caution. Steel members have fractured during such operations. Shoring as a precaution against the unexpected is advisable, particularly when redundant load paths are not certain.

As steel is heated, it loses strength and stiffness, and thus reasonable concerns have been raised regarding how welding will affect structures under load. Two important factors reduce the actual effect of such heating from welding. First, at temperatures up to approximately 650 °F, the reduction in strength and stiffness is negligible (Blodgett, 1966). Secondly, at any given time, only a very small portion of the cross-section of the structural element experiences the reduced properties (Tide, 1987).

The orientation of the weld with respect to the stress field is a factor, but rarely a controlling one. When welds are deposited parallel to the stress field, it is only the weld cross-sectional area and a small portion of the surrounding steel that experiences the reduced strength due to the elevated temperature. When welds are perpendicular to the stress field, the area of reduced strength and stiffness is the height of the weld bead plus a small portion of the surrounding steel times the length of the weld that is hot. This length includes the weld pool (which is typically 1.5 to 3 times as long as it is wide), and some length beyond the weld pool. The greater amount of heated metal in this case has prompted the general rule-of-thumb preference for longitudinal welds versus transverse welds when welding on members under load. However, the actual impact of such differences is typically inconsequential, but this should be checked for the actual application involved (Ricker, 1987; Tide, 1987).

12.8.4 Repair of Plastically Deformed Steel

Steel subject to inelastic deformations may be required to be welded. When steel is plastically deformed at temperatures below the transformation temperature, some degree of cold working occurs. This changes the mechanical properties to some extent, typically increasing the yield and tensile strength, while simultaneously reducing the ductility and Charpy V-notch toughness. The degree of change depends on the amount of cold working the steel experiences, as well as other factors. More extensive cold working increases the detrimental effects.

In addition to the above changes to the steel, welding will compound these changes through a phenomenon called strain aging. When the deformed steel is heated into the range of 400 to 700 °F (as will happen during welding), the strength further increases, and the ductility and CVN toughness decrease further (Stout, 1987). This same region of locally reduced notch toughness is also the region that will be strained as the weld shrinks leaving residual stresses at the yield point. Any small notch-like discontinuity in this area can serve to initiate fracture. Fortunately, this zone is in the base metal, away from the weld, and weld discontinuities will not form in this area. Since any cracking from strain aging occurs adjacent to the weld, it has many of the same characteristics of heat-affected zone cracking, which is hydrogen driven. Despite appearance similarities, the mechanisms seem to be different.

The nitrogen content of the steel, and specifically the "free nitrogen" (i.e., the nitrogen that is not chemically combined with other elements, such as aluminum) is a chief contributor to strain aging. Steels that are not fully killed with aluminum are particularly sensitive to strain aging. This would include rimmed steels, semi-killed steels, and silicon-killed steels, which are not commonly produced today but are present in many existing structures. Continuous casting of steel made with electric furnaces requires the use of aluminum in steel, and thus, much of today's steel production is more resistant to strain aging (Bailey, 1994).

Thermal stress relief can help the steel recover from some of the harmful effects of strain, again provided that the steel does not experience reheat cracking during stress relief. Reheat cracking is a form of cracking that occurs when steel contains at least two of the following elements: Cr, Mo, V, and B (Bailey, 1994). Of course, these elements are present in many structural steels used today. As an alternative to traditional stress relief, a full normalizing heat treatment that completely reverses the effects of cold working may be applied and eliminate strain aging concerns altogether. From a practical perspective, existing structures with plastically deformed steel will rarely be stress relieved or normalized. When welding on severely deformed steel results in repeated underbead cracking, and provided hydrogen has been dismissed as a contributing factor, such material may need to

be removed and a new piece of steel inserted and welded in place.

12.9 HEAT SHRINKING

Heat shrinking is not a welding operation, but an important metal-working operation that can be used to shape new steel, straighten bent steel, and correct members that have been excessively distorted by welding. Different terms are used to describe the process, including flame straightening and heat straightening. The principles that make flame shrinking work are identical to those that cause distortion: localized expansion due to heat, restraint by the surrounding colder steel, and subsequent cooling. The difference is, of course, that in heat shrinkage, such forces are being used to accomplish a desirable outcome.

The term "heat shrinking" is used here because it communicates an important aspect of the process; when properly done, the localized area of material is reduced in length and width (i.e., it shrinks) and it gets thicker. Heat shrinking is just the opposite of hot forming or hot bending; with these processes, hot metal is stretched and thinned. When steel is damaged, typically it has locally stretched and thinned. Properly done, heat shrinking offsets this damage and returns the material to its original shape and thickness.

Heat-shrinking techniques involve localized heating of the steel to temperatures of up to 1,100 to 1,200 °F. Additionally, the steel can be restrained, or jacking forces can be applied to keep the steel from moving in the direction it would assume if such restrictions were not in place. The heating causes the material to locally upset, thickening slightly since the steel was restricted from expansion by the surrounding colder metal. When the steel begins to cool, it volumetrically shrinks, and the resulting strains causes stresses that pull the surrounding steel toward the formerly hot material. A series of heats must be applied, and each heat incrementally moves the steel into the desired shape.

The AISC Specification and AWS D1.1 restrict the maximum temperature to 1,100 °F for quenched and tempered steels and to 1,200 °F for hot rolled steels. In doing so, the steel is kept below the transformation temperature and, in the case of the quenched and tempered (Q&T) steels, below the tempering temperature. Thus, the steel cannot be hardened if it is cooled too quickly, nor will it be softened due to annealing.

Restraint against movement induced by the heating process is essential for heat shrinking. Otherwise, the material would simply expand and contract back to the original shape. Members may be simply braced against movement or may be prestressed where the member is displaced in the direction of intended movement. This speeds the process considerably and makes each application of heat more efficient. Jacking forces initially impose only elastic loading on the steel, but as the steel is heated and expands, the local expansion causes localized yielding. Additionally, when heated to these temperatures, the yield and tensile strength of the steel drop, so yielding is more easily achieved. It is recommended that jacking forces not exceed 50 percent of the yield stress of the steel at room temperature (Avent and Mukai, 2001).

After the steel begins to cool, the desired movement occurs. Cooling takes time, and to accelerate the process, compressed air or a water-air mist may be applied. The steel cannot be hardened by these methods if it is not heated above the prescribed limits.

Various heating patterns have been developed to correct for specific damage, or to induce specific shapes into members being formed. Discussion of these techniques is beyond the scope of this Guide, but detailed information is available (Avent and Mukai, 2001).

Reasonable concerns have been raised regarding the effect of heat shrinking on the mechanical properties of the steel. Tests performed on undamaged members heated three and four times concluded that there is little change to the modulus of elasticity, slight increases in the yield and tensile strength, and a 10 to 25 percent increase in the ductility (Avent, 2001). This data represents the effect on new steel shaped with heat shrinking. Regarding damaged and straightened steel, in general, the yield stress increased approximately 10 percent over that of the unheated member, while the tensile strength increased 4 to 6 percent.

13. The Engineer's Role in Welded Construction

13.1 INTRODUCTION

AWS D1.1 requires the engineer's interaction on a variety of fabrication and erection issues. In a mature industry such as steel construction, codes and specifications address most routine applications. Such standards, however, will never be able to address all of the issues arising from innovative designs that press the envelope of what was considered by the code writers. Moreover, the code writers identify a range of options that are applicable only when specified by the engineer, knowing that such requirements are not justified in all applications. Only the engineer is in a position to understand the unique demands upon a new structure, and therefore, AWS D1.1 relies upon these individuals to identify specific requirements for unique structures.

AWS D1.1 requires the engineer's involvement in the construction process in a variety of manners, but in general, the engineer's role can be placed into one of four categories:

1. The engineer produces basic construction contract documents.
2. The engineer approves various aspects of the construction process.
3. The engineer evaluates and may approve alternatives submitted by the contractor.
4. The engineer addresses unexpected fabrication and erection difficulties.

These four topical areas are discussed in detail in the subsequent sections, but this coverage is not comprehensive in terms of all AWS D1.1 provisions.

Perhaps the engineer's most important welding-related function, and one that is not explicitly identified in AWS D1.1, is to ensure that the proper welding code is selected to govern the welding on a specific project. Building projects involving steel shapes and plates should be welded in accordance with AWS D1.1, while sheet metal structures, or sheet metal welded to structural steel, should be governed by AWS D1.3. When the structure is designed to resist high-seismic loads in accordance with the AISC Seismic Provisions, AWS D1.8, *Structural Welding Code—Seismic Welding Supplement,* should be invoked. Steel bridges are governed by AWS/AASHTO D1.5. The decision regarding the most applicable specifications for a project should be left neither to the contractor nor to the inspector.

13.2 CONTRACT DOCUMENTS

The engineer creates the general contract documents that will govern the fabrication and erection of a structure, and development of the documents that address welding-related issues are no exception. The engineer has the latitude, and the responsibility, to add to the contract documents any provisions not addressed in the code, but necessary for the specific project.

AWS D1.1 Section 1 clearly identifies an eight-point general list of items to be included in contract documents, as follows:

"The Engineer shall specify in contract documents, as necessary, and as applicable, the following:

1. Code requirements that are applicable only when specified by the Engineer.
2. All additional NDT that is not specifically addressed in the code.
3. Verification inspection, when required by the Engineer.
4. Weld acceptance criteria other than that specified in Section 6.
5. CVN toughness criteria for weld metal, base metal, and/or HAZ when required.
6. For nontubular applications, whether the structure is statically or cyclically loaded.
7. All additional requirements that are not specifically addressed in the code.
8. For OEM (original equipment manufacturers) applications, the responsibilities of the parties involved."

An extensive and helpful commentary on these items is provided. Item eight (regarding OEM applications) applies to proprietary products designed, built, and inspected by a single entity and does not apply to typical buildings, but may apply to some preengineered building system. While not specifically included in the eight points, contract documents obviously include drawings. Finally, for projects that involve welding on existing structures, contract documents must detail a variety of issues since there may be significant variations, project to project.

13.2.1 Design Drawings

Design drawings are one of the critical means by which important information relating to a specific project is communicated to the parties involved. This not only includes data to address the materials involved, sizes of members, length and locations of welds, etc., but also provides the opportunity to include notes that communicate detailed approaches to be used when fabricating the affected member(s).

AWS D1.1 Provision 2.2 is entitled "Contract Plans and Specifications" and identifies the major welding-related requirements for design drawings. Design drawings are required to contain "complete information regarding the base metal specification designation …location, type, size, and extent of all welds…" Field and shop welds are to be distinguished from each other. Weld joints requiring careful attention to welding sequence are to be so noted.

An advisory caution is supplied that notes that just because a weld detail may be prequalified, this does not mean that such prequalified details are suitable for all applications. Specifically, it states that prequalified joints "...have repeatedly demonstrated their adequacy in providing the conditions and clearances necessary for depositing and fusing sound weld metal to base metal. However, the use of these details in prequalified WPSs shall not be interpreted as implying consideration to the effects of the welding process on material beyond the fusion boundary, or suitability for a given application."

Special joint details are to be shown on drawings, and special inspection applied to specific joints is required to be shown on the drawings. When cyclic loading is applied, the engineer "...shall provide either complete details, including weld sizes, or shall specify the planned cycle life and the maximum range of moments, shears, and reactions for the connections." While it is not specified that this must be incorporated into the design drawings, it is the normal convention to do so.

For tubular T-, Y-, or K- connections, the "Z" loss dimensions (a function of the welding process, groove angle, and position of welding) are listed in AWS D1.1 Table 2.8. Together, AWS D1.1 Table 2.8 and AWS D1.1 Figure 3.5 are used to determine the maximum weld stress.

13.2.2 Static vs. Cyclic Loading

AWS D1.1 contains criteria for both statically and cyclically loaded members, and the nature of loading on a specific project must be identified in the contract documents. Because otherwise identical steel members can be applied to both statically and cyclically loaded applications, and yet the fabrication and inspection conditions are different, this detail must be documented.

While high-seismic loading certainly has a cyclic component, the AWS D1.1 cyclic loading criterion is based on low-stress-range, high-cycle loading. AWS D1.8 has been developed to address high-seismic loading applications.

13.2.3 Inspection Requirements

Inspection issues are primarily addressed in AWS D1.1 Section 6.

Unless nondestructive testing is specified in the contract documents, the only inspection required by AWS D1.1 is visual inspection, performed by the contractor's inspector (except for a couple of minor exceptions). Unless specified, there will be no nondestructive testing, no independent verification inspection—only the code-mandated visual inspection typically performed by an employee of the contractor.

The engineer should consider what inspection and nondestructive testing, if any, is required beyond visual inspection and state the appropriate requirements in the contract documents. Subsequent revision of contract requirements after the fact is addressed in AWS D1.1 Provision 6.6.5 as follows: "If NDT other than visual inspection is not specified in the original contract agreement but is subsequently requested by the Owner,…the owner shall be responsible for all the associated costs including handling, surface preparation, nondestructive testing, and repair of the discontinuities at rates mutually agreeable between the owner and the contractor." Note, however, that AWS D1.1 Provision 6.6.5 continues that "If such testing should disclose an attempt to defraud or gross nonconformance to this code, repair work shall be done at the contractor's expense."

Nondestructive testing (NDT) requirements are to be stated in the bid documents, including the types of welds to be examined, the extent of examination, and the method or methods of testing. The engineer must determine whether verification inspection is required. Verification inspection is independent of the contractor, and the results of it are reported to the engineer. This provision permits the engineer to waive verification inspection, perform all inspection functions with the verification inspector, or use both fabrication/erection and verification inspection (AWS D1.1 Provision 6.1).

The code provides three bases for qualifying inspectors and then states that, "If the engineer elects to specify the bases of inspector qualification, then it shall be so stated in contract documents." The engineer is authorized to verify the qualification of inspectors.

As previously mentioned above in Section 13.2.1 of this chapter, "any special inspection requirements" are required to be noted on the drawings or in the specifications.

When specified by the engineer, ultrasonic inspection (UT) raises a number of opportunities for the engineer's involvement. For example, AWS D1.1 Annex "K" contains alternate techniques for UT of welds, but the use of the annex procedures is subject to approval by the engineer. Annex "K" allows for inspection of welds beyond the conditions stated

in AWS D1.1 Section 6, Part "F," and includes variations such as other weld geometries, transducer sizes, frequencies, couplants, painted surfaces, and testing techniques, but such variations must be approved of in the contract documents (AWS D1.1 Provision 6.20.2).

13.2.4 Alternate Acceptance Criteria

AWS D1.1 is a workmanship standard, not a fitness-for-service document. This philosophy is conveyed in AWS D1.1 Commentary C5.1, which states "The criteria contained in Section 5, are intended to provide definition to the producer, supervisor, Engineer, and welder of what constitutes good workmanship during fabrication and erection." This is further amplified upon in AWS D1.1 Commentary C6.8, which says, "The criteria in Section 5 should not be considered as a boundary of suitability for service. Suitability for service analysis would lead to widely varying workmanship criteria unsuitable for a standard code." The code permits the engineer to specify alternate acceptance criteria, providing they are "suitably documented by the proposer and approved by the Engineer" (AWS D1.1 Provision 6.8). The proposer could be the engineer, and this can be specified in the contract documents. As will be discussed later, the proposer could be the contractor, in which case the engineer would be called upon to evaluate and approve the suitability of the alternate criteria.

The alternate criteria can be either more or less demanding than the standard criteria in the code. More demanding criteria may be important for new and unproven designs, higher strength materials, extremely thick material, very rigid structures, extreme operating temperatures, high loading conditions, applications involving little redundancy, and other factors. Conversely, well-understood applications with a long history of satisfactory performance may be instances where the engineer might use AWS D1.1 Provision 6.8 to permit less rigorous acceptance criteria, provided that their use can be justified.

13.2.5 Notch Toughness Requirements

AWS D1.1 Provision 2.2.2 requires the engineer to specify Charpy V-notch toughness testing requirements when required. AWS D1.1 may also use the term "impact testing" when referring to Charpy V-notch toughness testing, as in AWS D1.1 Provision 4.1.1.3: "When required by contract documents or specifications, impact tests shall be included in the WPS qualification. The impact tests, requirements, and procedures shall be in conformance with the provisions of Annex III, or as specified in the contract documents." AWS D1.1 Annex III contains a variety of details regarding the location of the Charpy impact testing specimen, the number of required specimens, the procedures of retests, and other details. What is not contained therein, however, is the testing temperature or the minimum average energy level. The engineer is to determine these variables and must "consider the effects of welding position as it may relate to heat input on the heat-affected zone (HAZ) test results…"

The role of impact properties, fracture toughness, and the requirements for minimum specification of properties as they relate to these issues is beyond the scope of this Guide. However, the engineer must understand that when no CVN toughness requirements are specified in contract documents, there is no minimum level of CVN toughness that can be assumed for the weld metal, heat-affected zone, or the base metal. Helpful background information on CVN toughness testing is provided in AWS D1.1 Commentary Provision C2.2.2.

13.2.6 Welding on Existing Structures

When one is strengthening and repairing an existing structure, the number of situations that conceivably could be encountered is practically endless. Thus, it is impossible for any code to provide specific requirements applicable to every situation that could arise. AWS D1.1 Section 8 is devoted to the subject of welding on existing structures, and so issues requiring the engineer's involvement are concentrated in this section for this topic. The specific plans drawn up by the engineer constitute the means by which the code writers have addressed these situations.

AWS D1.1 Provision 8.1 requires the engineer to prepare "a comprehensive plan for the work," with plans that include, "but are not limited to, design, workmanship, inspection, and documentation." The base metal type used in the original structure is to be determined before drawings and specifications are developed, and the suitability of welding of the base metal is to be established. For base metals other than those that are prequalified and listed in AWS D1.1 Table 3.1, "Special consideration by the Engineer must be given to the selection of filler metal and WPSs."

AWS D1.1 Provision 8.3.5 requires that "The Engineer shall determine the extent to which a member will be permitted to carry loads while heating, welding, or thermal cutting is performed."

Fatigue enhancement for existing structures is addressed in AWS D1.1 Provision 8.4. Various methods are identified that can be used, when approved by the engineer. The engineer is required to determine appropriate increases in the allowable stress range.

When members are to be heat straightened, AWS D1.1 Provision 8.5 applies and requires the engineer to determine whether unacceptable discontinuities are to be repaired prior to heat straightening or welding.

Visual inspection is required for the work performed to strengthen or repair a structure, in accordance with AWS D1.1 Provision 8.6. However, such visual inspection is also subject to conforming with the "Engineer's comprehensive

plan." Nondestructive testing criteria are required to be specified in contract documents as well.

Strengthening existing structures is a challenge (see Section 12.9 of this Guide). Repairing damaged structures is an even greater challenge. Performing such procedures on structures with materials that were not welded in the first place compounds the problem further. Under such circumstances, the engineer should seek out experts with experience in this particular field. These unique situations are prime examples of circumstances that codes cannot be expected to address sufficiently. Job-specific specifications need to be developed by the engineer in order to address these unique circumstances.

13.2.7 Structural Details

There are a variety of structural details that the engineer may elect to require for a specific project. What is an acceptable detail for one type of structure may not be acceptable for another. The type of loading may be a major factor in determining such acceptability.

Temporary Welds

AWS D1.1 Provision 5.18.1 requires that temporary welds be made to the same quality criteria as final welds. Even though the quality should be the same as a final weld, when the engineer so requires, the temporary welds are to be removed. Conversely, when the engineer does not require their removal, they may remain in place except as follows: "for cyclically-loaded nontubular connections, there shall be no temporary welds in tension zones or members made of quenched-and-tempered steels except at locations more than ⅙ of the depth of the web from tension flanges of beams or girders…" For architecturally exposed steel, or for other conditions of dynamic loading, such temporary welds may be unacceptable. In such circumstances, the engineer can specify their removal.

Tack Welds

Tack welds are to be made of the same quality as the final welds. AWS D1.1 Provision 5.18.2.3 requires that tack welds not incorporated into the final welds be removed, except that for statically loaded structures, they need not be removed unless directed by the engineer. The default conditions for statically loaded structures, therefore, is that tack welds need not be incorporated, and they need not be removed. This may be undesirable for architecturally exposed steel. Leaving such tack welds in place may not be a conservative approach for higher strength steels.

Steel Backing

There are no secondary members in weld design, and therefore, attachments such as steel backing may affect the performance of the overall structure. Steel backing is addressed in AWS D1.1 Provision 5.10. For cyclically loaded structures only, backing is required to be removed from joints that are transverse to the direction of computed stress, but steel backing on welds that are parallel to the direction of stress is permitted to stay in place, unless their removal is specified by the engineer. Additionally, the longitudinal welds that attach backing are required to be welded full length for cyclically loaded structures, but for statically loaded structures, intermittent welds are permitted. Also, for statically loaded structures, all steel backing is permitted to stay in place, regardless of the direction of loading, unless required to be removed by the engineer.

Weld Tabs

Weld tabs permit groove welds to be made in a manner that will ensure weld soundness to the end of the joint. AWS D1.1 Provision 5.31.2 permits weld tabs to remain in place for statically loaded structures unless the engineer requires them to be removed. Aesthetics and/or job site safety may necessitate their removal.

13.2.8 Certification of Welding Materials

If the engineer desires certification of certain welding materials, these must be requested. This would include welding filler materials and welding shielding gas (AWS D1.1 Provision 5.3), and welding stud certification (AWS D1.1 Provision 7.3.3).

13.3 APPROVALS

13.3.1 Background

The engineer is required to make a significant number of evaluations of alternatives that the code permits. These are generally in response to requests by the contractor. Issues that require the engineer's approval are concentrated in AWS D1.1 Section 5, although such items are dispersed throughout the code. The relative suitability of these various alternatives must be considered by the engineer, always considering whether the alternatives being sought will permit the structure to perform in its intended manner.

Approval or denial of these alternatives may significantly affect the contractor's cost. Not knowing whether or not an alternative will be approved places a contractor in a difficult position during the bidding process. To eliminate this risk, some contractors will submit bids contingent upon approval of certain code-permitted alternatives that are subject to the engineer's approval. In accepting the bid, the engineer agrees

to also approve such alternatives. If the contract is modified later, the contractor is then in a position to renegotiate the financial aspects of the project.

Sometimes, after the contract is let, cost-saving alternatives are identified that still require the engineer's approval. In order to make the situation into a "win-win" proposition, "value-engineering" can be applied, and the savings divided between the contractor and the owner. Regardless of any possible financial incentives, the integrity of the project cannot be sacrificed.

In most situations, the contractor makes the request to the engineer to approve an alternative. When the option is not granted, a default position exists and the project can progress accordingly, utilizing the standard practice identified in the code.

When the engineer is called upon to approve a request made by the contractor, it typically fits into one of the following general categories:

1. New materials and processes not covered by the code.
2. Routine items that are generally approved but should be critiqued for anomalies.
3. Practices that need careful review to make certain they are appropriate for the application.
4. Practices that may or may not be acceptable, depending on the specific application.

13.3.2 New Materials and Processes

AWS D1.1 provides methods of allowing new welding and cutting processes, new base metals and new filler metals. New developments will always precede code changes that reflect such advances. If such provisions did not exist, progress would be impeded as innovations are put "on-hold" waiting for incorporation into the governing specifications.

Welding Processes

The code lists welding processes that may be used for prequalified WPSs, as well as welding processes that may be used for construction under the code. The code further extends the opportunity for the use of other welding processes, when the engineer (AWS D1.1 Provisions 3.2.3, 4.15.2) approves these other methods. Alternate processes could involve a variety of new or different controls that need to be monitored, and the evaluation of such variables is part of the alternate process approval activity.

13.3.3 Routine Items

While nothing should be viewed as truly routine, AWS D1.1 contains some provisions that are generally accepted by engineers for most projects, and these have been placed into this category.

Welder Qualification

All welders, welding operators, and tack welders who perform work governed by the code must be qualified by test as prescribed in the code. In most situations, contractors will have previously qualified their workforce in other projects, and the code extends to the engineer the option of approving the use of previous personnel qualification tests, eliminating the need for retesting (AWS D1.1 Provision 4.1.2.1).

Inspector Qualification

The engineer's involvement in approving the qualifications of personnel includes inspectors (AWS D1.1 Provision 6.1.4.5).

13.3.4 Practices Requiring Review

The following options need review since the test data that is required to support these alternatives may not be applicable to the specific project involved. In other words, the tests may accurately demonstrate the capability of a concept to work under test conditions, and yet it may not perform under actual fabrication conditions. This warning should not cause the engineer to automatically reject such options. Rather, they need to be reviewed, with the assistance of a consulting expert if necessary, to ensure that the expected results will be achieved.

Previous Qualification of WPSs to Other Standards

According to AWS D1.1 Provision 4.1.1.2, the engineer can accept welding procedures that have been previously qualified to another standard, such as American Society of Mechanical Engineers (ASME) Section IX, and can also approve the use of standard welding procedures as published in AWS B2.1.XXX-XX. In most cases, the acceptance of previously qualified welding procedures is a routine practice, providing that these WPSs have the proper documentation and are applicable to the proposed work. The use of standard welding procedures can be reviewed with the same scrutiny, except that the supporting PQRs would not be available to the engineer for review. However, the AWS B2 Committee has performed this task already, simplifying the process, and perhaps adding another level of assurance to the sequence.

Alternate Acceptance Criteria

Alternate acceptance criteria, previously discussed above under Section 13.2.4 of this chapter, may also fit into the approval category when someone other than the engineer proposes the alternate criteria. Such options are addressed in AWS D1.1 Provisions 6.8 and 6.5.5. The code makes such alternate criteria acceptable, provided that certain stipulations are met, and that the engineer approves of the alternative.

13.3.5 Practices That May or May Not Be Acceptable

The acceptability of application-specific provisions may depend on the structure, loading, specific location within the structure, or other factors. It is not a matter of "good practice" or "bad practice," but rather, what is right for the particular conditions involved.

Repair of Cut Edges

Specific roughness requirements for various thermal cuts are outlined in AWS D1.1 Provision 5.15, and gouges that exceed those limits can be repaired with the engineer's approval. The commentary applied to these provisions specifically addresses the topic of "occasional notches and gouges" by stating that the D1.1 Committee "refrained from assigning any numerical values on the assumption that the Engineer, being the one most familiar with the specific conditions of this structure, will be a better judge of what is acceptable. The Engineer may choose to establish the acceptance criteria for occasional notches and gouges."

Caulking

Caulking involves the mechanical, plastic deformation of weld metal and base metal and historically has been prohibited by the code since it can be used to mask weld discontinuities. However, caulking is now permitted under certain conditions because it may prevent failure of various coatings that are subsequently applied. Weld inspection must be completed prior to the caulking treatment, and "the technique and limitations on caulking are [to be] approved by the engineer" (AWS D1.1 Provision 5.28).

Die Stamping

AWS D1.1 Provision 6.5.6 requires the inspector to identify parts that have been inspected and accepted, but the method of identification is not defined. However, "die stamping" cannot be used on cyclically loaded members, unless approved by the engineer.

Distortion Control Plan

AWS D1.1 Provision 5.21.3 requires a distortion control plan where "excessive shrinkage or distortion can be expected." The plan is to be submitted to the engineer "...for information and comment" before welding is performed on the member in which the excessive shrinkage or distortion is expected. The code provides no "default" position for the condition when the engineer does not supply comments, nor is there a code-defined timeframe or method for communication of such comments. This provision is closely related to that contained in AWS D1.1 Provision 2.2.3 where the engineer is to note "joints or groups of joints in which the Engineer or Contractor require a specific assembly order, welding sequence, welding technique or other special precautions."

Unspecified Welds

In addition to ascertaining that all required welds have been placed in the proper location and are of the required size and length, AWS D1.1 Provision 6.5.1 requires that the inspector check to make certain "that no unspecified welds have been added without the approval of the Engineer."

RT and Weld Tab Removal

Weld tabs are required by AWS D1.1 Provision 6.17.3.1 to be removed prior to radiographic inspection unless otherwise specified by the engineer.

Thermal Cutting on Cyclically Loaded Structures

For cyclically loaded structures, thermal cutting is to be done in a mechanized or automatic manner unless the engineer approves of free-hand thermal cutting (AWS D1.1 Provision 5.15.4.2).

13.4 UNEXPECTED CIRCUMSTANCES

13.4.1 Background

Irregularities that may occur during a project often present undesirable circumstances for both the contractor and the engineer, but they must be resolved in order for the project to move ahead. Time is of the essence, as projects are typically put on hold while the engineer is evaluating such situations, resulting in delays. Unlike conditions in which the code has provided a default alternative, these circumstances require the engineer to act. Efforts at mutual cooperation on the part of the contractor and the engineer will facilitate progress in difficult circumstances.

When unexpected construction difficulties arise, and when such difficulties are potentially significant to the project and the performance of the structure, it is important for the engineer to obtain the necessary technical guidance in order to perform the code-mandated obligations. This expertise frequently comes from consultants who have unique expertise in dealing with such problems.

Unexpected issues requiring the engineer's involvement fit into these categories:

1. Base metal discontinuities.
2. Fit-up and alignment problems.
3. Welding problems.
4. Post-welding corrections.

13.4.2 Base Metal Discontinuities

During fabrication and erection, discontinuities may be detected in base metals. The shrinkage stresses induced by

welding are significant, and cracking or lamellar tearing may result. Cutting of plates or shapes may expose internal discontinuities within the base metals. Such discontinuities may or may not affect the performance of the final structure, and as such, the code requires the engineer to evaluate imperfections in the base metal that exceed a defined threshold.

AWS D1.1 Provision 5.15 addresses base metal preparation, and permits removal and repair of mill-induced discontinuities on the surface of the material or on cut edges. The discontinuity is required to be removed and all welded repairs are required to be done in accordance to the code. The total length of repair welding may not exceed 20 percent of the length of the plate surface being repaired, except with the approval of the engineer. For edge discontinuities that are discovered on cut material, specific levels of acceptability and repair practices are identified. If these limits are exceeded, the part "shall be rejected and replaced, or repaired at the discretion of the Engineer."

During weld inspection, discontinuities in the base material may be observed. AWS D1.1 Provision 6.20.4 deals with UT inspection and requires that base metal discontinuities such as cracking, lamellar tearing, and delaminations that are discovered adjacent to the weld be reported to the engineer for disposition.

13.4.3 Fit-up and Alignment Problems

When steel is assembled, fit-up between adjacent members may not be what was depicted on the drawings. Such misalignment may be the result of poor workmanship. It can also result from the accumulation of acceptable tolerance variations, whether in the as-received materials or in the fabricated pieces, resulting in dimensions that exceed code limits. Such variations may have no effect on the final structure's behavior, but in other situations such differences may be critical. The engineer must make this evaluation.

AWS D1.1 Provision 5.22 provides tolerances for joint dimensions. Specific girth weld alignment requirements for tubular members are identified, but additional tolerance relief is available for this alignment, when approved by the engineer. Specific acceptable tolerances for groove weld root openings are given; if these tolerances are exceeded, they may be corrected by welding, but only when approved by the engineer.

13.4.4 Welding Problems

Cracks

A crack in a weld, or in the adjacent base metal, is a very serious issue that needs to be addressed. The causes or implications of such cracking need to be understood and the potential impact on the structure evaluated. When major cracking occurs, the engineer is to be notified so that such an evaluation can take place (AWS D1.1 Provision 5.26.3).

Damaged Base Metal

When base metal is damaged because of faulty welding, or when the base metal is damaged by removal of faulty welds for rewelding, and the base metal is no longer "in accordance with the intent of the contract documents, the contractor shall remove and replace the damaged base metal or shall compensate for the deficiency in a manner approved by the Engineer" (AWS D1.1 Provision 6.6.3).

Major Repairs

AWS D1.1 Provision 5.26.3 requires the engineer's approval for "repairs to base metal...repairs of major or delayed cracks, repairs to electroslag and electrogas welds with internal defects, or for a revised design to compensate for deficiencies." This provision is in place because such defects can have a major impact on the performance of the structure, and the repair techniques to deal with such problems may be complex in and of themselves.

When electroslag welding is performed, and if the welding is inadvertently stopped and then restarted, such restarts are required by AWS D1.1 Provision 5.4.4 to be reported to the engineer. Other criteria apply to these conditions as well, including radiographic inspection.

When unacceptable welds are made, and further work is performed that makes access to the original defective weld impossible, a plan must be established to address the problems. If the members are not cut apart in order to gain access to the original weld, the deficiency in the original weld "shall be compensated for by additional work performed according to an approved, revised design" (AWS D1.1 Provision 5.26.4).

13.4.5 Post-Welding Corrections

Cutting Assembled Steel

Before steel is cut apart for any reason, AWS D1.1 Provision 5.26.3 requires that the engineer be notified. This is particularly important for structures during the erection stage, since the member being cut may be performing critical load-carrying functions at that time.

Mislocated Holes

When holes are mislocated, AWS D1.1 Provision 5.26.5 provides a detailed sequence that must be followed. The engineer must approve such procedures when the base metal is subject to cyclic loading. In many cases, it is preferred to leave the mislocated hole open, since welding under these conditions frequently introduces weld defects that may be more harmful than the hole itself.

Heat Shrinking of Q&T Steel

When camber is incorrect on a built-up member, heat straightening can be applied in order to correct for camber variations. AWS D1.1 Provision 5.19 permits such adjustments but requires that any corrections in the camber of quenched-and-tempered steel members be done only with the approval of the engineer. D1.1 Provision 5.26.2 prescribes the temperature limits for heat straightening, and quenched-and-tempered steels have a lower approved temperature limit (1100 °F) than other steels (1200 °F). This requires more careful monitoring of the steel temperature and thus requires the engineer's involvement.

14. Economy in Welding

14.1 INTRODUCTION

When performed properly, welding is an economical tool for joining steel. Conversely, welding can be quite expensive and uneconomical when improperly applied. Economy in welding is achieved when good, efficient designs are fabricated and erected using good, efficient welding procedures. Economical designs utilize grades of steel that are easy to fabricate and employ joint details and weld types that efficiently transfer the applied loads. Such designs contain groove weld details, such as root openings and included angles that are optimized, with consideration given to the location and position in which welding will be performed. Economical welding procedures use the best welding process for the application and deposit weld metal at a rapid pace, consistent with quality requirements and adherence to safe work practices.

Optimizing all of these factors (and others that have not been specifically listed) is a challenge. The basic principles that should be considered, however, are outlined below. In that this Guide is primarily directed to the engineer, the items covered here are primarily design related. Detailers will find the information helpful as well. Many resources are available to assist contractors in their quest for more economical welding procedures. Technological developments in both welding consumables and machinery make yesterday's "best practices" obsolete, requiring the progressive contractor to continually examine new opportunities.

The number one cost in welding is that of the skilled labor required to make a weld. In general terms, labor will account for 75 to 95 percent of the cost of a weld made manually or semiautomatically. Energy costs, filler metals, and shielding materials make up the remaining 5 to 25 percent. For a given weld size, economical welding is typically achieved when welding procedures are used that deposit the required metal in the least amount of time. Quality and safety should never be compromised for the sake of productivity. It is not unusual, however, to make quality welds in a safe manner with procedures that are twice as productive as another otherwise acceptable alternative. In general terms, a welding procedure that deposits the required metal twice as fast will reduce the welding cost by 50 percent.

Most of the principles below are presented in terms of reduced weld metal volumes, assuming that as the required amount of welding goes down, so will the required time to make the weld. There are two caveats: First, presenting these concepts in such terms runs the risk of implying that the major cost of welding is filler metal when, in fact, with North American labor rates, labor is invariably the largest single cost factor in welding. Second, there are situations wherein a weld joint requiring a larger volume of weld metal can be completed more rapidly than one requiring less metal, because it may be possible to deposit the metal at a faster rate in a joint requiring more metal.

The lowest cost weld will always be the one that is made only once. The cost of a weld repair is estimated to be 10 times greater than the initial welding cost. If a particular weld design or welding procedure is marginal in its ability to consistently achieve the required quality criteria, necessitating ongoing weld repairs, economy can surely be achieved by adopting practices to eliminate the rework.

While the principles outlined below are generally true, there are no doubt exceptions to every example. The conditions associated with a specific project may require considering factors beyond those presented here in order to yield the most economical solution.

14.2 SELECTION OF PROPER WELD TYPE

14.2.1 CJP Groove Welds vs. Alternatives

Complete joint penetration (CJP) groove welds are typically the most expensive type of weld, and in general, are reserved for situations in which they are the only viable option. In butt joints where the full tensile capacity of the surrounding steel must be developed, CJP groove welds are the only option and should be used. It is possible to replace the direct butt joint with lapped plates joined with fillet weld and/or plug/slot welds, but such a configuration is generally much more expensive.

In corner joints, the capacity of a CJP groove weld is seldom required because the welds in such joints are normally subject to shear. If the capacity of a CJP is needed, and if access to both sides of the joint is possible, partial joint penetration (PJP) groove welds with fillet welds on the opposite side are typically more economical.

Like corner joints, T-joints loaded in shear (such as web to flange welds in plate girders) are rarely loaded to a level that would necessitate the use of CJP groove welds. If such capacity is required, however, PJP or fillet welds, or combinations of the two, are usually more economical than the use of CJPs.

The position of welding must be considered when weld types are selected. Consider a beam-flange to column-flange joint in a field welded moment connection. Double-sided joint details are impractical in the situation as overhead

welding would be required. While double-sided fillet welds, or double-sided PJP groove welds combined with fillet welds may initially appear advantageous from a perspective of minimizing weld metal volume, production considerations of flat position welding justify the use of a single-sided CJP groove weld.

A major deviation to the above principles regarding CJP groove welds occurs when electroslag or electrogas welding is used, either by preference or necessity. Such processes are ideally suited for CJP groove welds, and in order to optimally use the processes, a CJP groove weld may become the best option. The most common such situation occurs when internal diaphragms are fitted inside box sections.

14.2.2 Fillet Welds vs. PJP Groove Welds

Fillet welds and PJP groove welds can both be used in T-joints and inside corner joints, and thus, it is important to know which option is more economical. For welds with equal throat dimensions, a PJP groove weld in a 90° T-joint requires one-half the volume of weld metal, as does a fillet weld – see Figure 14–1. This assumes that the PJP groove uses a 45° included angle and that the effective throat "E" is equal to the depth of groove preparation "S," which will not always be the case. However, with these assumptions in place, a 2:1 ratio in the volume of weld metal for the same strength exists, with the PJP groove weld being more efficient.

PJP groove welds require that a bevel be applied to create the groove. One method of estimating time for beveling is to assume that it will take the same amount of time as making a single weld pass. This would suggest that single-pass fillet welds are always more economical than PJP groove welds, and that so long as a fillet weld requires no more than one additional pass over that required for the PJP, the fillet weld will be the more economical choice.

Welding position and material handling must also be considered. Both details shown in Figure 14–1 are oriented for horizontal position welding. While fillet welds are easily made in either the flat or horizontal position, PJP groove welds are ideally made in the flat position (although horizontal position welding is certainly possible). If the T-joints shown were double sided, and if the PJP groove welds were made in the flat position, then more material handling would be required to make the PJP groove welds as compared to horizontal position fillet welding. Such material handling adds costs and may provide sufficient incentive so as to encourage the use of fillet welds instead.

As a simple rule-of-thumb, use fillet welds whenever the required weld leg size is 1 in. or less, and use PJP groove welds when larger sizes are required. In that most structural steel fillet welds are not required to have leg sizes greater than 1 in., fillet welds are typically the most economical choice.

An exception to this trend exists when the T-joints are skewed, as shown in Figure 14–2. On the obtuse side, the throat of the fillet weld becomes disproportionately small as the angle increases, whereas the PJP option does not suffer from this trend. The naturally occurring gap is another factor that must be considered, and the effect with the fillet weld is greater than with the PJP. Many factors are involved in determining the best detail for this situation, and this is best examined on a case-by-case basis.

14.2.3 Combination PJP/Fillet Weld Option

When the required weld size justifies a PJP groove weld rather than a fillet weld (see Section 14.2.2 above), a PJP/fillet weld combination, as shown in Figure 14–3, may be the most economical option. Section 3.5.9 of this Guide contains a discussion of how the weld throat is determined for this combination weld.

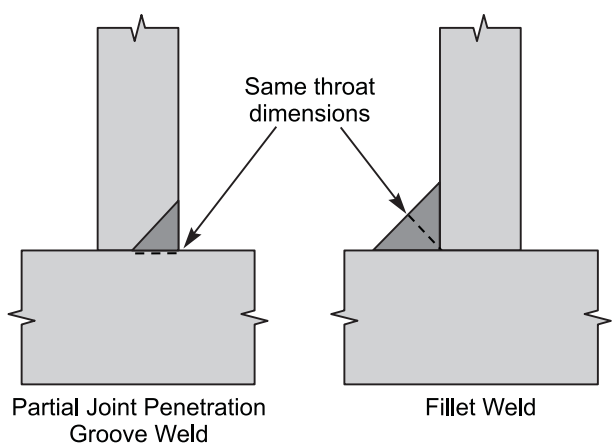

Figure 14–1. Fillet and PJP groove weld throats.

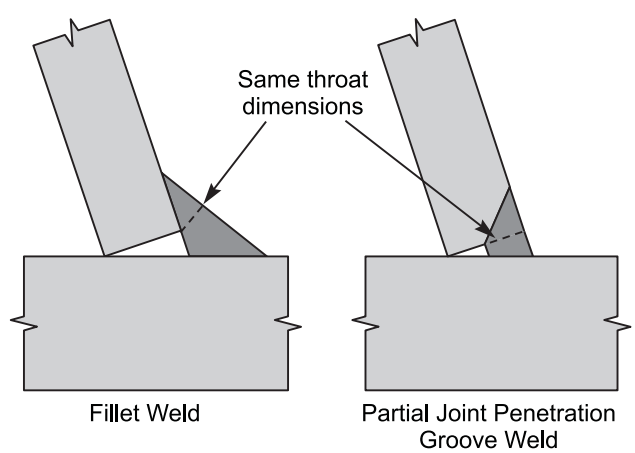

Figure 14–2. Throats in skewed T-joints.

When a 45° included angle is used for the PJP portion of the weld, and when the fillet weld leg size is equal to the depth of groove weld preparation ("S"), then a combination PJP/fillet weld requires no more weld metal than does a PJP alone. As demonstrated in Section 14.2.2 above, this will be one-half as much as would be required for a fillet weld of equal strength.

The combination offers some additional advantages: first, in a T-joint, it is hard to make an absolutely flat-faced PJP groove weld, and it is natural to find that a fillet weld of some sort is often applied, even though not specified—see Figure 14–4. When made in the horizontal position, the extra weld applied in this manner is often extensive. Secondly, and particularly for cyclically loaded structures, it may be desirable to have a fillet weld on top of the PJP groove weld to provide for a better contour at the intersection.

When PJPs offer advantages over fillets, then the PJP/fillet weld combination should be considered as well, and the combination is typically preferred over the PJP-only option, particularly when welding is performed in anything other than the flat position.

14.3 PROPER DETAILING OF WELDS

Welds of the same type and strength can be detailed to minimize costs. This responsibility typically rests with the detailer, who must balance several variables to achieve the required weld strength in an economical manner.

14.3.1 Fillet Welds: Leg Size vs. Length

For a given strength level of filler metal, a fillet weld's strength depends on the weld throat (which is proportional to the leg) and the weld length. The fillet weld leg size should be no less than the minimum prequalified size (see Section 3.5 of this Guide) and no larger than any applicable maximum size. The length cannot be longer than the joint, nor smaller than the minimum weld length. Within these limits, however, there are theoretically endless combinations of weld sizes and lengths that can all be used to achieve a connection of the required strength.

The strength of a fillet weld increases linearly with the length—double the length and double the strength. When this is done, the weld volume doubles as well. Alternately, the weld leg size can be doubled—double the leg size and double the strength. However, when the weld leg size is doubled, the volume of weld metal increases by a factor of four (not two). For economy, fillet welds should be detailed to be longer rather than larger as more strength is needed.

After the required capacity of the weld has been determined, the required weld length should be calculated using the minimum prequalified fillet weld size for the thicknesses of materials involved. If the calculated length is much less than the joint length, intermittent fillet welds are an option. If the required length is greater than the joint length, then the fillet weld leg size must be increased.

A simple and practical way of doubling the weld length is to make double-sided fillet welds on T-joints, for example. Where access permits, and where justified due to the loads transferred across the joint, the double-sided alternative requires half the volume of weld metal as would be required for a single-sided fillet weld of equivalent strength. Additionally, the weld root is protected against tearing, and distortion control is typically better.

14.3.2 Fillet Welds: Intermittent vs. Continuous

For lightly loaded connections, intermittent fillet welds may be a logical and economical choice. For cyclically loaded structures, the fatigue implications must be considered. Economical intermittent fillet welds are never larger than the minimum prequalified size, nor are they ever multipass

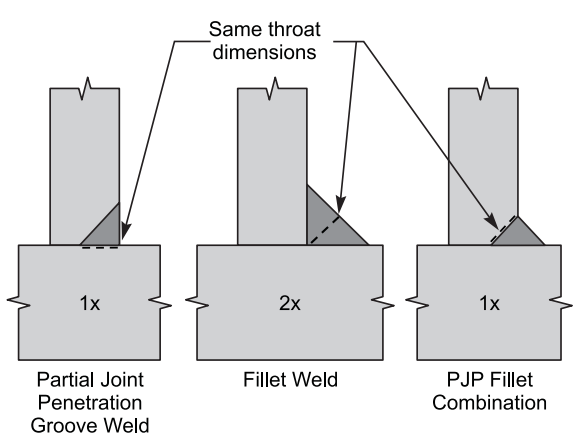

Figure 14–3. T-joint fillet weld and PJP groove weld options.

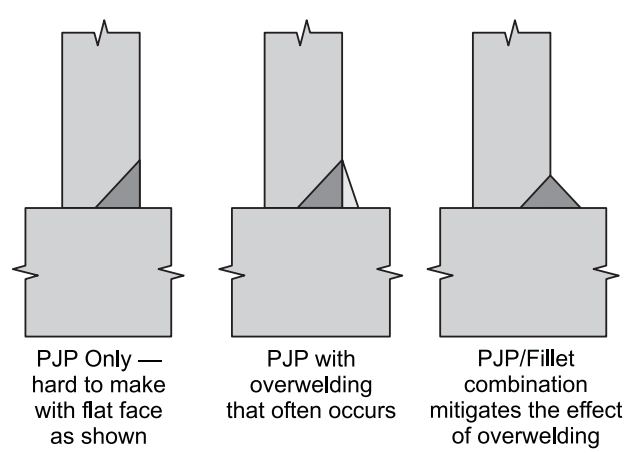

Figure 14–4. Effects of horizontal position welding.

Table 14–1. Weld Metal Volume for Single- vs. Double-Sided Preqalified Weld Details			
Thickness (Weld Throat), in.	Single V-Groove Weld, 30° Included Angle, ⅜ in. Root Opening (B-U2a), lbs/ft	Double V-Groove Weld, 60° Included Angle, ⅛ In. Root Opening, 0 in. Root Opening (B-U3b), lbs/ft	Ratio of Single Sided to Double Sided
½	0.99	0.60	1.50 : 1
1	2.38	1.68	1.42 : 1
2	6.54	5.37	1.22 : 1
4	20.44	18.85	1.08 : 1
6	41.72	40.42	1.03 : 1

welds. If the intermittent welds are required to be larger than the minimum size, then economy can be achieved by specifying fillet welds of the minimum size with a longer length, even if the extra length requires that the weld be continuous for the length of the joint.

Production considerations may result in a contractor's preference for continuous versus intermittent welds, even though intermittent welds may satisfy design requirements. Initiating and terminating a weld are always complicated operations, and elimination of these starting and stopping conditions may outweigh the savings achieved by intermittent welding. Automated and robotic welding systems are typical situations in which such preferences are seen. Unless there are offsetting factors, such as the need to carefully control distortion, the use of continuous fillet welds in lieu of intermittent fillet welds is generally acceptable.

14.3.3 CJP Groove Welds: Single vs. Double Sided

When access to both sides of a joint is possible, the option of single- or double-sided CJP groove welds exists. For years, diagrams such as that shown in Figure 14–5 have been used to suggest a 2:1 savings in weld metal is possible when moving from a single-sided weld to a double-sided one, and for this specific geometry, this relationship is obviously correct. However, neither of the CJP groove weld details shown in this figure represent the prequalified joint details that are typically used for structural steel fabrication.

As shown in Figure 14–6, a prequalified single-sided CJP groove weld detail will contain steel backing, as well as a root opening dimension. The included angle for the single V-groove detail is usually smaller than that for the double V-groove alternative since the single-sided option utilizes a root opening that provides for better access to the root of the joint.

Figure 14–7 illustrates details of the double-sided V-groove detail: The included angle is larger than the conceptualized example, as would be typical of an actual joint. A root face dimension has been shown, as would typically be used in an actual detail. Finally, the cross-hatched area represents the metal removed by backgouging that must be restored.

The effect of the thickness of the materials being joined must also be considered. For thicker materials, the smaller included angle associated with the single-sided detail makes it a more economical detail as thicknesses become greater, as can be seen in Figures 14–8 and 14–9.

Each detail has some production advantages and limitations. The double-sided detail requires more edge preparation. The single-sided option requires backing, but not the backgouging required of the alternative. All welding is done from one side on the single-sided joint, eliminating the possible need for part movement (such as flipping parts) in order to obtain the generally more favorable flat position for welding. For parts that cannot be rotated, single-sided welds may eliminate the need for out-of-position (overhead) welding. The steel backing associated with the single-sided detail more readily accommodates fitup variation as shown in Figure 14–10.

The decision is not as simple as is implied with the example shown in Figure 14–5, because the 2:1 ratio does not hold true for many prequalified details, as shown in Table 14–1.

For these examples, the 2:1 ratio was never achieved, and for heavier thicknesses, the differences became inconsequential. In general, issues other than simply weld volume should be used to determine whether single- or double-sided CJP groove welds should be used. Single-sided welds are usually easier to prepare and make, making them preferable to double-sided welds when distortion control is not a concern.

14.3.4 CJP Groove Weld Details: Included Angle vs. Root Opening

For single-sided V-groove and bevel groove weld details, a combination of the root opening and the included angle en-

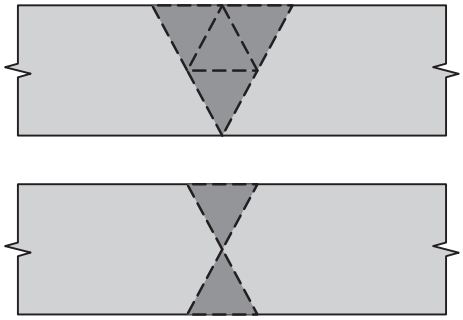

Figure 14–5. Single- vs. double-sided CJP groove welds—an idealized comparison.

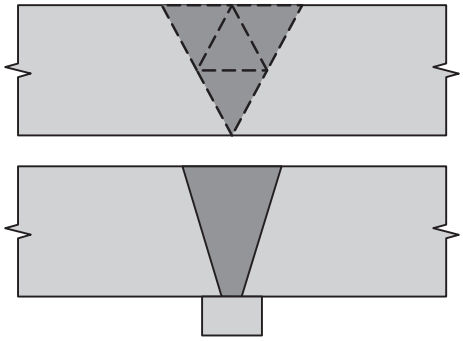

Figure 14–6. Single-sided V-groove welds—idealized vs. prequalified.

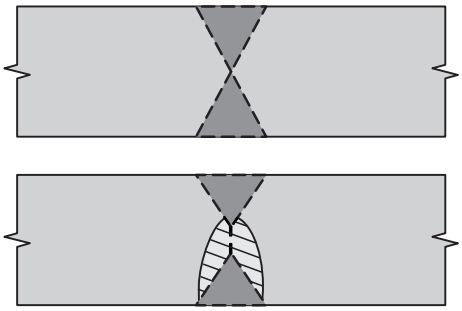

Figure 14–7. Double-sided V-groove welds—idealized vs. prequalified.

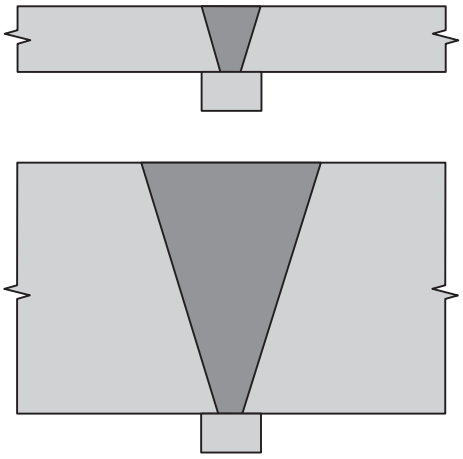

Figure 14–8. Effect of thickness on single-sided V-groove welds.

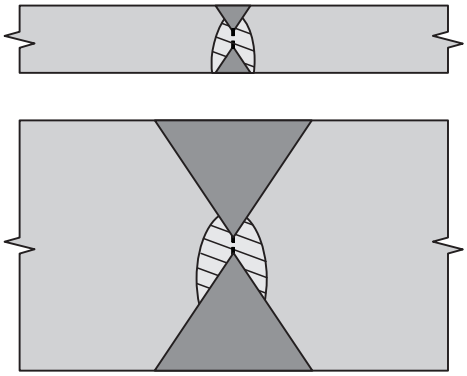

Figure 14–9. Effect of thickness on double-sided V-groove welds.

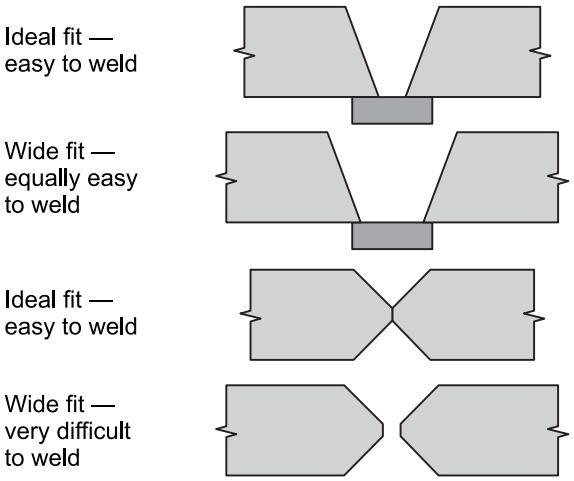

Figure 14–10. Effect of poor fit-up on CJP groove weld options.

Table 14–2. Single V-Groove Weld (B-U2a) Weight of Weld Metal (lbs/ft)						
Thickness (Weld Throat), in.	**Included Angle**	**Root Opening**	**Included Angle**	**Root Opening**	**Included Angle**	**Root Opening**
	45°	**¼ in.**	**30°**	**⅜ in.**	**20°**	**½ in.**
⅜	**0.62**		0.71		0.84	
½	**0.90**		0.99		1.13	
⅝	**1.23**		1.29		1.44	
¾	**1.61**		1.62		1.76	
⅞	2.03		**1.99**		2.11	
1	2.50		**2.38**		2.47	
1⅛	3.01		**2.80**		2.86	
1¼	3.56		**3.24**		3.26	
1⅜	4.16		3.72		**3.68**	
1½	4.81		4.23		**4.12**	
2	7.85		6.54		**6.07**	
3	16.08		12.57		**10.88**	
4	27.19		20.44		**16.91**	

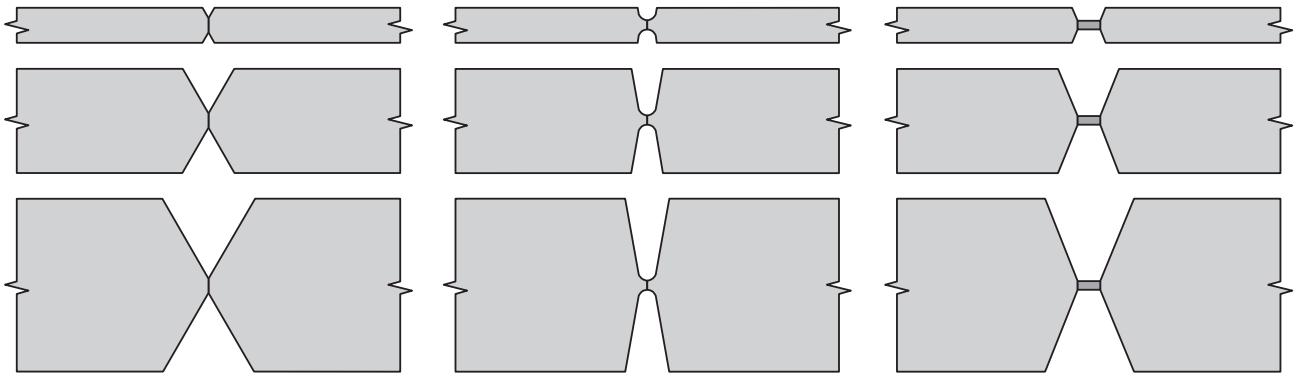

Figure 14–11. Groove weld preparations and thicknesses.

Table 14–3. Double-Sided CJP Groove Weld Options Weight of Weld Metal (lbs/ft)						
Thickness (Weld Throat), in.	V-Groove (B-U3c-S)		U-Groove (B-U7-S)		V-Groove with Spacer Bar (B-U3a)	
	$\alpha = \beta = 60°$	f = ¼ in.	$\alpha = \beta = 20°$	f = ¼ in.	$\alpha = \beta = 20°$	f = ¼ in
	R = 0 in.	–	*R* = 0 in.	Bevel radius *r* = ¼ in.	*R* = ⅝ in.	Spacer bar = ¼ × ⅝ in.
2	3.79		**3.58**		5.56	
2½	5.83		**4.94**		7.27	
3	8.79		**6.45**		9.13	
3½	12.38		**8.11**		11.15	
4	16.04		**9.92**		13.31	
4½	19.44		**11.88**		15.63	
5	26.95		**14.00**		18.10	

sure that the weld root is accessible and that the root pass will have a proper width-to-depth ratio. Acceptable relationships have been incorporated into the prequalified groove weld details contained in AWS D1.1. Selecting one combination of details over another is typically driven solely by the relative economy. Table 14–2 illustrates the possibilities.

All details result in welds of equal strength and are equally easy to make, so economy is a logical criterion on which to base the selection. The figures in bold represent details that require the least amount of weld metal. For thinner materials (≤ ¾ in. thick), the details with the smaller root opening and larger included angle are more economical, whereas for material ≥ 1⅜ in. thick, the opposite is true.

For heavier material, the consequences of improper detail selection are more pronounced, both on a percentage basis, and in terms of actual weld volumes involved. Using the 20° included angle, ½-in. root opening detail vs. the 45° included angle, ¼-in. root opening alternative results in a savings of nearly 40 percent, and over 10 lb of weld metal per foot of joint.

Ideally, the various options should be compared as such welds are detailed, and the most economical detail selected. However, a rule-of-thumb has developed that is easy to remember and implement and requires only slight compromise: For CJP groove welds with a throat dimension less than 1 in., use the smaller permitted root opening with the larger included angle, and for throat dimensions of 1 in. or more, use the larger root opening and smaller included angle.

14.3.5 CJP Groove Welds: V and Bevel vs. U and J

Various groove weld preparations are illustrated in Figure 14-11. The V- and bevel groove details have planar surfaces that can be easily thermally cut. U- and J-groove details have curved surfaces, requiring more complicated methods for preparation. However, once the preparation is complete, the required weld volume is reduced and cost savings are possible. Most structural steel shops do not have the machining capability to prepare U- and J-groove details, and thus V- and bevel groove options are used.

Table 14–3 compares three viable options for heavier plate.

The U-groove detail requires the least amount of weld metal, as would be expected. However, a comparison of the spacer bar detail to the V- and U-groove alternatives shows that for material greater than 3 in., the spacer bar option is a practical and economical choice. Typical applications may include chord splices of trusses that use very heavy rolled sections for the chord members.

14.3.6 PJP Groove Welds: Single- vs. Double Sided

When the connection requires the strength, double-sided PJP groove welds require half of the weld volume of the single-sided alternative, with the only additional cost being the preparation of the opposite-side bevel. Using the rule-of-thumb that the bevel time (cost) is about the same as that required to make a single weld pass, single-sided PJP groove welds requiring three weld passes or more are probably more economical than two-sided alternatives.

Ideally, groove welds are made in the flat position, and double-sided PJP groove welds necessitate repositioning the material in order to take advantage of flat position welding. In contrast, single-sided PJP groove welds can be made without this extra material handling activity.

Additionally, double-sided PJP groove welds better protect the unfused root region from tearing. Single-sided details must be restrained to prevent rotation about the weld root.

14.3.7 Flare Groove Welds

Flare V- and bevel groove welds, when filled flush, have throat dimensions that are defined in AISC Specification Table 2.4, which, depending on the welding process, vary as a function of the radius on the curved member(s). It is often assumed that filling such joints flush is required, but less than flush-filled joints are permitted, provided that the required throat is still obtained. This cost-saving idea is simple; specify only the required throat dimension, rather than assuming that the flush condition is required. As the thickness of the curved member increases, so does the radius and weld throat that is achieved for heavier members. As a result, the potential savings can be significant when thicker curved members are involved.

14.3.8 Shop vs. Field Welding

It is unlikely that there are any operations (drilling, bolting, sandblasting, painting, etc.) that are more economically done in the field versus in the shop, and welding is no different. The practical implementation of this principle is simply to specify welding in the shop to the greatest extent possible. Whenever possible, large or complicated connections should be welded in the shop, leaving the simpler connections for field welding. In rare situations, this may even justify the creation of an additional splice, as is done with tree-column connections; at the node, complicated connections are made in the shop, and at the ends of the tree branches, simpler splices are made in the field.

Regardless of where welding is performed, it must be done in a safe manner, and the resulting weld must meet the quality requirements. Field conditions are more demanding, but both safety and quality can be achieved in the field when the site is properly supervised and managed.

14.3.9 Welded vs. Bolted Connections

An often-repeated saying, but one without either economic or technical justification, goes like this: "Weld in the shop, bolt in the field." Some fabrication shops call themselves "welding shops" and others "bolting shops," but most are involved with some of each. The relative economics should be carefully examined before mere "sayings" are used to dictate practices.

As a general rule, the heavier the connection, the greater the economic advantage associated with welding, as the following comparison illustrates. Involved is a tensile splice of a W14×730 rolled shape. While it is an extreme example, it illustrates the point that welding is often more desirable than bolting.

The bolted connection required used 128 high-strength bolts, connecting the 5-in. flanges with a 4-in. plate on the outside and 3-in. plate on the inside, detailed to be 106 in. long. The bolts were required to be 14 in. long. The welded alternative required the use of 70 lb of filler metal, and since SAW was used, 140 lb of flux.

The total fabrication time for the bolted connection included cutting the splice plates, drilling the holes, and installing the bolts, estimated at 84.3 hours. The welded alternative required a total time of 28.6 hours, which included the time to bevel the joints, weld the connection, and remove weld tabs and backing. The bolted detail required 6,900 lb of additional steel, because of the size of the splice plates.

Costs for labor and materials constantly change, but at the time of the study, the welded connection cost about 20 percent as much as the bolted alternative. The relative cost difference is not likely to have changed, so long as North American labor rates are used (Miller, 2001, 2002). This study was accurate for the conditions studied, but is not presented as representative of all welded versus bolted conditions. It does, however, demonstrate that simple sayings like "weld in the shop, bolt in the field" can lead to significantly flawed economic decisions.

The above study was based on shop conditions. To estimate field conditions, the welding labor was doubled, but the bolting labor maintained constant. The spread in the estimated cost obviously decreased since the bolting cost didn't increase at all (which is unlikely). Still, the field welded connection detail showed a 25-percent savings in the comparison.

15. Welding Safety

Welding is a safe operation when sufficient measures are taken to protect the welder from potential hazards. When these measures are overlooked or ignored, welders can encounter such dangers as electrical shock; overexposure to arc radiation, fumes, and gases; and fire and explosions—any of which may result in fatal injuries.

ANSI Z49.1:2005, *Safety in Welding, Cutting, and Allied Processes*, available as a free download from AWS (http://www.aws.org/), should be consulted for information on welding safety. A printed copy is also available for purchase from Global Engineering Documents (www.global.ihs.com, telephone 1-800-854-7179).

From the same site, a variety of AWS Safety and Health Fact Sheets can also be downloaded. A partial list of Fact Sheets includes the following:

- Fumes and Gases
- Radiation
- Noise
- Electrical Hazards
- Fire and Explosion Prevention
- Burn Protection
- Mechanical Hazards
- Tripping and Falling
- Falling Objects
- Confined Spaces
- Contact Lens Wear
- Ergonomics in the Welding Environment
- Graphic Symbols for Precautionary Labels
- Pacemakers and Welding
- Electric and Magnetic Fields (EMF)
- Lockout/Tagout
- California Proposition 65
- Fluxes for Arc Welding and Brazing: Safe Handling and Use
- Metal Fume Fever
- Arc Viewing Distance
- Oxyfuel Safety: Check Valves and Flashback Arrestors
- Grounding of Portable and Vehicle Mounted Welding Generators
- Cylinders: Safe Storage, Handling and Use

Safety information is also available from manufacturers of welding equipment and consumables. Warning labels on machines and consumable packaging should be read and followed. Material safety data sheets (MSDSs) should also be read and followed.

References

AESS Supplement (2003). "Architecturally Exposed Structural Steel," a supplement to *Modern Steel Construction*, American Institute of Steel Construction, May.

AISC (1997a). *Engineering and Quality Criteria for Steel Structures, Common Questions Answered*, 4th edition. American Institute of Steel Construction, Chicago, IL.

AISC (2005). *Steel Construction Manual*, 13th edition. American Institute of Steel Construction, Chicago, IL.

AISC (2005a). *ANSI/AISC 360-05. Specification for Structural Steel Buildings*. American Institute of Steel Construction, March, Chicago, IL.

AISC (2005b). *ANSI/AISC 341. Seismic Provisions for Structural Steel Buildings*. American Institute of Steel Construction, March, Chicago, IL.

AISC (2005c). *ANSI/AISC 358. Prequalified Connections for Special and Intermediate Steel Moment Frames for Seismic Application*s. American Institute of Steel Construction, December, Chicago, IL.

AISC (2005d). *AISC 303-05. Code of Standard Practice for Steel Buildings and Bridges*, American Institute of Steel Construction, March, Chicago, IL.

AISC (2005e). *Design Examples, version 13.0*. American Institute of Steel Construction, Chicago, IL.

ANSI (2005). *ANSI Z49.1:2005 Safety in Welding, Cutting and Allied Processes*. American National Standards Institute.

ASM (1997). *Weld Integrity and Performance: A Source Book Adapted from ASM International Handbooks*, conference proceedings and technical books. ASM International, Materials Park, OH.

ASTM (1998). *1998 Annual Book of ASTM Standards: Section 1: Iron and Steel Products* (Vol. 1.04 Steel—Structural, Reinforcing, Pressure Vessel, Railway). American Society for Testing and Materials, West Conshohocken, PA.

Avent, R.R. and Mukai, D.J. (2001). "What You Should Know About Heat Straightening Repair of Damaged Steel," *Engineering Journal*, AISC, First Quarter, pp. 27-49.

AWS (1972). *AWS D19.0-72 Welding Zinc-Coated Steel*. American Welding Society, Miami, FL.

AWS (1991). *ANSI/AWS A2.4-91 Standard Symbols for Welding, Brazing and Nondestructive Examination*. American Welding Society, Miami, FL.

AWS (1994). *ANSI/AWS A3.04-94 Standard Welding Terms and Definitions*. American Welding Society, Miami, FL.

AWS (1996a). *ANSI/AWS A5.28-96 Specification for Low-Alloy Steel Electrodes and Rods for Gas Shielded Arc Welding*. American Welding Society, Miami, FL.

AWS (1996b). *ANSI/AWS A5.5-96 Specification for Low-Alloy Steel Electrodes for Shielded Metal Arc Welding*. American Welding Society, Miami, FL.

AWS (1997a). *ANSI/AWS A5.26/A5.26M-97 Specification for Carbon and Low-Alloy Steel Electrodes for Electrogas Welding*. American Welding Society, Miami, FL.

AWS (1997b). *ANSI/AWS A5.17/A5.17M-97 Specification for Carbon Steel Electrodes and Fluxes for Submerged Arc Welding*, American Welding Society, Miami, FL.

AWS (1997c). *ANSI/AWS A5.23/A5.23M:1997 Specification for Low-Alloy Steel Electrodes and Fluxes for Submerged Arc Welding*. American Welding Society, Miami, FL.

AWS (1998a). *ANSI/AWS D1.3-98 Structural Welding Code—Sheet Steel*. 4th edition. American Welding Society, Miami, FL.

AWS (1998b). *ANSI/AWS A5.29:1999 Specification for Low-Alloy Steel Electrodes and Fluxes for Flux Cored Arc Welding*. American Welding Society, Miami, FL.

AWS (1999). *AWS D1.6:1999 Structural Welding Code—Stainless Steel*, American Welding Society, Miami, FL.

AWS (2001). *AWS A5.18/A5.18M:2001 Specification for Carbon Steel Electrodes and Rods for Gas Shielded Arc Welding*. American Welding Society, Miami, FL.

AWS (2002). *AASHTO/AWS D1.5M/D1.5:2002 Bridge Welding Code*. American Welding Society, Miami, FL.

AWS (2003). *AWS D1.2/D1.2M:2003-04 Structural Welding Code—Aluminum.* 4th edition. American Welding Society, Miami, FL.

AWS (2004a). *AWS D1.1-04 Structural Welding Code—Steel.* 19th Edition. American Welding Society, Miami, FL.

AWS (2004b). *AWS A5.1/A5.1M:2004 Specification for Carbon Steel Electrodes for Shielded Metal Arc Welding.* American Welding Society, Miami, FL.

AWS (2005a). *AWS D1.4/D1.4M:2005 Structural Welding Code—Reinforcing Steel*. 6th edition. American Welding Society, Miami, FL.

AWS (2005b). *AWS A5.20/A5.20M:2005 Specification for Carbon Steel Electrodes for Flux Cored Arc Welding.* American Welding Society, Miami, FL.

AWS (2005c). *AWS D1.8-05 Structural Welding Code—Seismic Supplement (publication pending).* American Welding Society, Miami, FL.

Bailey, N., et al. (1973). *Welding Steels Without Hydrogen Cracking*, ASM International, Materials Park, OH, and Abington Publishing, Cambridge, England.

Bailey, N. (1994). *Weldability of Ferritic Steels*, ASM International, Materials Park, OH, and Abington Publishing, Cambridge, England.

Barsom, J.M. (2003). "Structural Failures: Effects of Joint Design," *Proceedings of the North American Steel Construction Conference,* AISC, Baltimore, MD (April 2–5).

Barsom, J.M. and Rolfe, S.T. (1999). *Fracture and Fatigue Control in Structures: Applications of Fracture Mechanics*. 3rd edition. ASTM, West Conshohocken, PA.

Blodgett, O.W. (1966). *Design of Welded Structures.* James F. Lincoln Arc Welding Foundation, Cleveland, OH.

Blodgett, O.W. and Miller, D.K. (1993). "The Challenge of Welding Jumbo Shapes," *Welding Innovation*, James F. Lincoln Arc Welding Foundation, Vol. X, No.1, pp. 3–16.

Blodgett, O.W. (1995). "Details to Increase Ductility in SMRF Connections," *Welding Innovation*, James F. Lincoln Arc Welding Foundation, Vol. XII, No. 2, pp. 16–18.

Bjorhovde, R. (2005). "Realistic Performance Requirements for Steel in Structures," *Advances in Structural Engineering*, Multi-Science Publishing Co. Ltd, Vol. 8, No. 3 (June), pp. 203–216.

Brockenbrough, R.L. (2002). *AISC Rehabilitation and Retrofit Guide: A Reference for Historic Shapes and Specifications*. American Institute of Steel Construction, Chicago, IL.

Doty, W.D. (1987). "Procedures for Thermal Cutting and Welding Heavy Structural Shapes," *Proceedings of the National Engineering Conference and Conference of Operating Personnel*," New Orleans, AISC (April 29–May 2), pp. 16-1–16-6.

FEMA (1997). FEMA-288 (SAC-95-09), *Background Reports: Metallurgy, Fracture Mechanics, Welding, Moment Connections and Frame Systems Behavior*, Federal Emergency Management Agency, Washington, D.C.

Fisher, J.M. and Kloiber, L.A. (2006). AISC Design Guide 1, 2nd edition, *Column Base Plates*, American Institute of Steel Construction, Chicago, IL.

Fisher, J.W. and Pense, A.W. (1987). "Procedures for Thermal Cutting and Welding Heavy Structural Shapes," *Proceedings of the National Engineering Conference and Conference of Operating Personnel*, New Orleans, AISC, (April 29–May 2), pp. 18-1–18-47.

Frank, K.H. (1997). "Structural Steels, Their Physical and Metallurgical Properties," FEMA-288 (SAC-95-09), *Background Reports: Metallurgy, Fracture Mechanics, Welding, Moment Connections and Frame Systems Behavior*, Federal Emergency Management Agency, Washington, D.C.

Garlich, M. J. (2000). "Welding to Existing Structures," presented at the North American Steel Construction Conference, Las Vegas, February 24–25.

Gensamer, M. (1941). *Strength of Metals under Combined Stresses*, American Society for Metals, Cleveland, OH.

Hajjar, J.F. et al. (2003). "Continuity Plate Detailing for Steel Moment-Resisting Connections," *Engineering Journal*, Vol. 40, No. 4, p. 189.

Hirth, J.P. (1984). "Theories of Hydrogen Induced Cracking of Steels," *Hydrogen Embrittlement and Stress Corrosion Cracking,* (Papers presented at a symposium held at Case Western Reserve University on June 1-3, 1980.) American Society for Metals, Metals Park, OH.

J.F. Lincoln Arc Welding Foundation (2000). *The Procedure Handbook of Arc Welding*, 14th edition, James F. Lincoln Arc Welding Foundation, Cleveland, OH.

Johnson, M.Q. (1997). "Evaluation of the Effect of Welding Procedures on the Mechanical Properties of FCAW-S and SMAW Weld Metal Used in Construction of Seismic Moment Frames," *SAC Background Documents, SAC/BD-96/01 thru SAC/BD-00/30*, SAC Joint Venture, Sacramento, CA.

Kulak, Geoffrey (2002). *High Strength Bolts: A Primer for Structural Engineers*, AISC Design Guide 17, American Institute of Steel Construction, Chicago, IL.

Kloiber, L. and Thornton, W. (2001). "Design of Skewed Connections," *Engineering Journal*, American Institute of Steel Construction, Vol. 30, No. 3, p. 140.

Mandal, N.R. (2004). *Welding and Distortion Control*, ASM International, Materials Park, OH and Narosa Publishing House, New Delhi, India.

Miller, D.K. (1998a). "Consider Penetration When Determining Fillet Weld Size," *Welding Innovation*, James F. Lincoln Arc Welding Foundation, Vol. XV No. 1, pp. 20–22.

Miller, D.K. (1998b). "Consider Direction of Loading When Sizing Fillet Welds," *Welding Innovation*, James F. Lincoln Arc Welding Foundation, Vol. XV No. 2, pp. 8–9.

Miller, D.K. (1999a). "Watch Out for 'Nothin'' Welds," *Welding Innovation*, James F. Lincoln Arc Welding Foundation, Vol. XVI, No. 1, pp. 16–18.

Miller, D.K. (1999b). "Use Caution When Specifying 'Seal Welds'," *Welding Innovation*, James F. Lincoln Arc Welding Foundation, Vol. XVI, No. 2, pp. 17–19.

Miller, D.K. (2001). "Mixing Welds and Bolts, Part 1," *Welding Innovation*, James F. Lincoln Arc Welding Foundation, Vol. XVIII, No.2, pp. 16–18.

Miller, D.K. (2002a). "Designing Fillet Welds for Skewed T Joints—Part 1," *Welding Innovation*, James F. Lincoln Arc Welding Foundation, Vol. XIX, No. 1, pp. 7–11.

Miller, D.K. (2002b). "Mixing Welds and Bolts, Part 2,"

Welding Innovation, James F. Lincoln Arc Welding Foundation, Vol. XIX, No. 2, pp. 8–11.

Ricker, D.T. (1987). "Field Welding to Existing Steel Structures," *Proceedings of the National Engineering Conference and Conference of Operating Personnel*," New Orleans, AISC (April 29–May 2) pp. 42-1–42-25.

Quintana, M.A., and Johnson, M.Q. (1998). "The Effects of Intermixed Weld Metal on Mechanical Properties—Part 3," *Proceedings on Welded Construction in Seismic Areas*, Maui, Hawaii, AWS (October 6-8), pp. 103–120.

Stout, R.E., et al (1987). *Weldability of Steels*, Welding Research Council, New York, NY.

Tide, R.H.R. (1987). "Basic Considerations When Reinforcing Steel Structures," *Proceedings of the National Engineering Conference and Conference of Operating Personnel*, New Orleans, AISC (April 29–May 2), pp. 53-1–53-16.

Yurioka, N. and Suzuki, H. (1990). "Hydrogen Assisted Cracking in C–Mn and Low Alloy Steel Weldments," *International Materials Reviews*, Vol. 35, No. 4, pp. 217–249.